WARING™ COMMERCIAL SPECIALTY PRODUCTS

WARING COMMERCIAL™

Professional Knife Sharpener

WKS800

Features

- Two grinding wheels (fine/coarse), one stropping wheel
- Grinds at 18-22˚ angles – optimum angles recommended by knife manufacturers
- Stropping wheel operates in reverse direction allowing for a more efficient removal of burrs and polishing of the blade
- Magnetized drawer under grinding wheels captures metal shavings
- Limited One Year Warranty

c UL US NSF

Commercial Knife Sharpener
WKS800

Specifications

Item	Electrical	Listings	Dimensions (H" x D" x L")	Warranty
WKS800	120 VAC, 60 Hz	UL, NSF approved	4.25" x 5.75" x 12.5"	Limited 1 Year

Ordering Information

Description	Catalog #	Std Pkg.	Ship Wt. (Lbs.)	Cubic Feet	UPC Code
Commercial Knife Sharpener	WKS800	4	25.8	1.96	040072004636

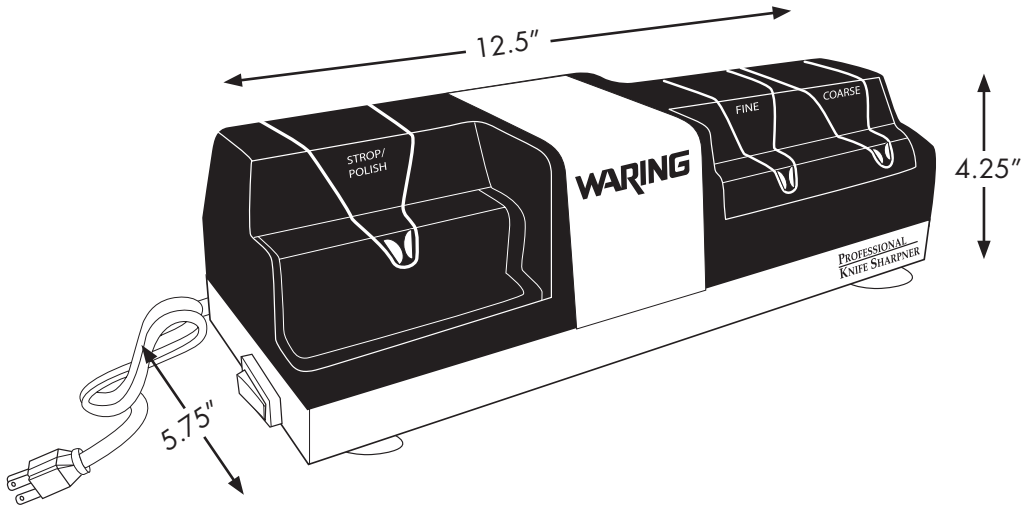

Waring Commercial • 314 Ella T. Grasso Ave. • Torrington • Connecticut 06790
Tel. (800) 492-7464 • Fax (860) 496-9008 • www.waringproducts.com • ©2006

06WC30109
PG-19102