Project:

Item Number:

Quantity:

COUNTERTOP AND FLOOR MIXERS

40756

40758

Mixers

MODELS

40756	Countertop Mixer – 10 Quart with Guard
40757	Floor Mixer – 20 Quart with Guard
40758	Floor Mixer – 30 Quart with Guard
40759	Floor Mixer – 40 Quart with Guard
40760	Floor Mixer – 60 Quart with Guard

FEATURES

Countertop Mixer

- ❑ Commercial grade table model
- ❑ Five-speed direct drive transmission
- ❑ Digital control panel to make easy speed shifts while unit is running
- ❑ Compact and lighter weight design for smaller footprint, easier cleaning, and portability
- ❑ Non-skid rubber base

Floor Mixers

- ❑ Three speed direct drive gear transmission
- ❑ Safety cut-switch automatically turns the unit off if gears are changed without stopping the mixer
- ❑ 60 quart model includes bowl truck for convenient bowl transport
- ❑ Meat Grinder, Vegetable Slicer, reducer kits, and other accessories available
- ❑ 12" (30.48 cm) hub accommodates Meat Grinder and Vegetable Slicer attachments for flexibility between grinding, slicing, and mixing
- ❑ Comes standard with: dough hook, wire whisk, spatula, stainless steel mixing bowl, safety guard

DESCRIPTION

Vollrath's new line of Mixers are a standard-setting advance in value: all the features, all the workhorse durability, and all the Vollrath service, reliability, and reputation in one tough range of Mixers, ready to keep you mixing strong, serving long.

Agency Listings

NSF

Intertek

Due to continued product improvement, please consult www.vollrathco.com for current product specifications.

Approvals

Date:

Setting the Standard™

www.vollrathco.com

The Vollrath Company, L.L.C.
1236 North 18th Street
Sheboygan, WI 53081-3201
U.S.A.
Main Tel: 800.628-0830
Service Tel: 800.628.0832
FAX: 800.752.5620

Vollrath of Canada, Co
Tel: 800.695.8560
FAX: 800.752.5620

COUNTERTOP AND FLOOR MIXERS

MODELS

40756	Countertop Mixer – 10 Quart with Guard	40759	Floor Mixer – 40 Quart with Guard
40757	Floor Mixer – 20 Quart with Guard	40760	Floor Mixer – 60 Quart with Guard
40758	Floor Mixer – 30 Quart with Guard		

DIMENSIONS

Dimensions shown in inches (cm).

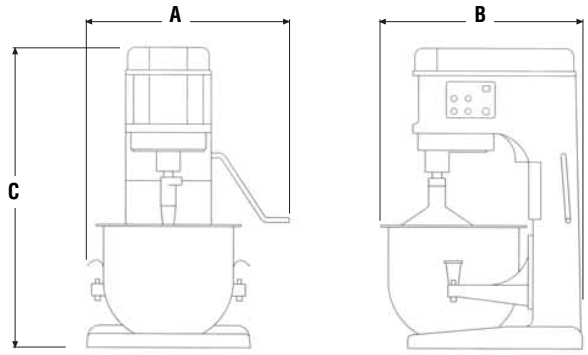

40756

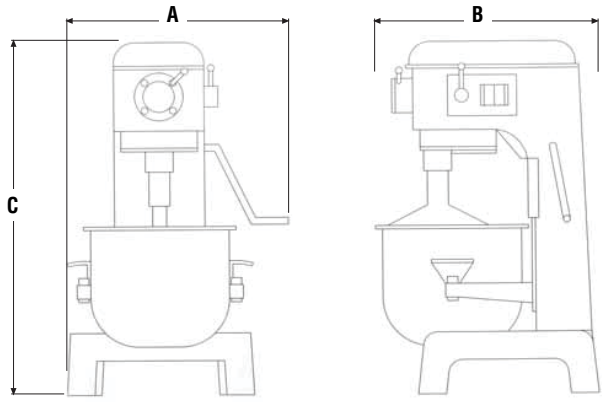

40757, 40758, 40759

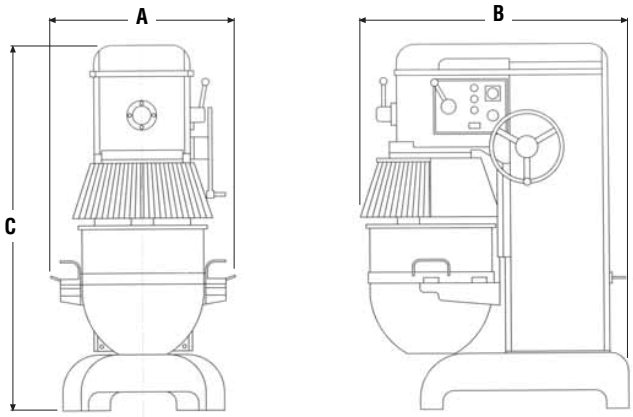

40760

SPECIFICATIONS

Item	Dimensions (A) Width	Dimensions (B) Length	Dimensions (C) Height	Transmission	HP	Voltage	Amps	Plug
40756	13 1/16 (33.2)	17 11/16 (44.9)	21 3/16 (53.8)	5 speed	1/3	110	6	5-15P
40757	20 3/8 (51.8)	20 3/8 (51.8)	35 5/8 (90.5)	3 speed	0.5	110	8	5-15P
40758	25 (63.5)	24 1/2 (62.2)	47 7/8 (121.6)	3 speed	1	110	16	5-15P
40759	26 1/2 (67.3)	26 9/16 (67.5)	47 1/8 (119.7)	3 speed	1.5	220	12	6-15P
40760	27 3/8 (69.5)	30 (76.2)	55 13/16 (141.5)	3 speed	2	220	16	6-15P

Receptacles

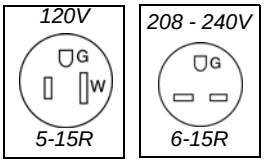

The Vollrath Company, L.L.C.
1236 North 18th Street
Sheboygan, WI 53081-3201
U.S.A.
Main Tel: 800.628-0830
Service Tel: 800.628.0832
FAX: 800.752.5620

Vollrath of Canada, Co
Tel: 800.695.8560
FAX: 800.752.5620

www.vollrathco.com

©2010 The Vollrath Company L.L.C.

Form Number L35737 1/10
Printed in USA