REFRIGERATOR MANUFACTURER
Turbo air
more durable, efficient, beautiful

1250 Victoria St
Carson, CA 90746
Tel. 310-900-1000
Fax. 310-900-1077
www.turboairinc.com

Project :	
Model # :	
Item # :	Qty :
Available W/H :	
Approval :	

Worktop Freezer

Worktops
Super Deluxe Series

EXCEPTIONAL 3 YEAR PARTS & LABOR WARRANTY

Model : TWF-28SD

FEATURES / BENEFITS

Stainless Steel Cabinet Construction
The Turbo Air Super Deluxe model boasts a stainless steel interior and exterior (galvanized steel back & bottom). It guarantees the utmost in cleanliness and long product life. The Super Deluxe can add a touch of style to the most refined setting.

Sturdy, Clean Stainless Shelving
Shelves are the most important part of cleanliness as they come in direct contact with food. After a while, PVC coated wire shelves may peel, rust and lead to unsanitary conditions. Only the Turbo Air Super Deluxe series uniquely provides stainless shelving.

Hot Gas Condensate System
Through Turbo Air's creative innovation, the condensate system surfaces have been specially treated to resist corrosion. This not only increases efficiency without the risk of refrigerant leakage from corrosion, but also prevents the overflow of condensate water.

Incandescent Interior Lighting

Efficient Refrigeration System
Turbo Air's solid door freezers are designed with oversized and balanced (CFC Free R-404A) refrigeration systems. These include efficient evaporators and condensers for faster freezing and greater efficiency.

High-Density Polyurethane Insulation
The entire cabinet structure and solid doors are foamed-in-place using high density, CFC free polyurethane insulation.

Ergonomically Designed Doors
Customers' fatigue fades away with easy grip handles and doors that open effortlessly. These features along with self-closing doors make this the ultimate choice in customer convenience. ABS sheet door liners resist water condensation with thermal efficiency.

Magnetic Door Gaskets
Magnetic door gaskets are of one piece construction, removable without tools for ease of cleaning and replacement.

Freezer Holds -5°F ~ -10°F for the Best in Frozen Food Preservation

Intertek IS09001 3 YEAR WARRANTY Compressor 5 YEAR WARRANTY (U.S.A only)

Model	Swing Door	CU./FT.	#of Shelves	HP	AMPS	Crated Weight (lbs.)	L x D* x H† (inches)
TWF-28SD	1	7	1	1/3	5.3	175	27 1/2 x 30 x 33 1/2

Ver.201307

*Depth does not include 1" for rear spacers. † Height does not include 5-7/8" for caster height.

Worktop Freezer

Worktops
Super Deluxe Series

Model : TWF-28SD

ELECTRICAL DATA	
Voltage	115/60/1
Plug Type	NEMA-5-15P
Full Load Amperes	5.3
Compressor HP	1/3
Cord Length ft.	9
Refrigerant	R-404A
DIMENSIONAL DATA	
Net Capacity cu. ft.	7
Ext. Length Overall in.	27 1/2 (699mm)
Ext. Depth Overall in.*	30 (762mm)
Ext. Height Overall in.†	33 1/2 (851mm)
# of Doors	1
# of Shelves	1
Gross Weight lbs.	175
Net Weight lbs.	157

Design and specifications subject to change without notice.
Actual shipping weight may differ due to extra packing materials for product protection.
* Depth does not include 1″ for rear spacers.
† Height does not include 5-7/8″ for caster height.

- **WARRANTY : Exceptional 3 Year Parts and Labor Warranty**
  Additional 2 Year Warranty on Compressor

- Self-Contained System
- 4” Swivel Casters
- 2.5” Dia. Casters Available (optional)
- Legs Available for All Models (optional)

- **OPTIONAL ACCESSORIES :**
  - ❑ 2.5” Diameter casters
  - ❑ 5” Diameter casters
  - ❑ 6“ ABS plastic legs
  - ❑ Additional stainless steel shelves
  - ❑ Additional PE coated wire shelves

PLAN VIEW

(unit : inch)

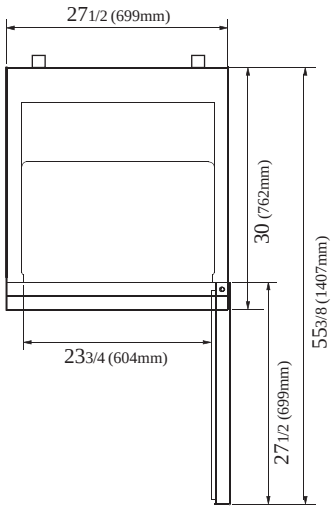

PLAN VIEW

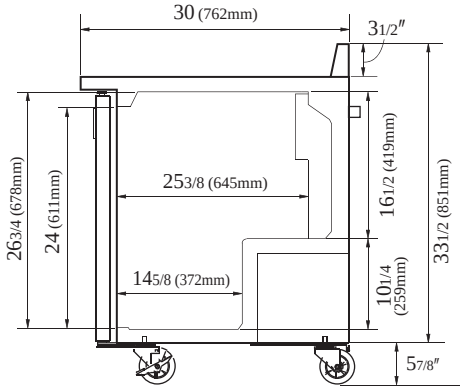

SIDE VIEW

Ver.201307

Intertek IS09001

- **Turbo Air** : 800-627-0032
- **GK** : 800-500-3519
- **Warranty** : 800-381-7770
- **AC** : 888-900-1002

Turbo air · GERMAN KNIFE · RADIANCE · GREEN WORLD · Turbo air