REFRIGERATOR MANUFACTURER
Turbo air
more durable,convenient,beautiful

1250 Victoria St
Carson, CA 90746
Tel. 310-900-1000
Fax. 310-900-1077
www.turboairinc.com

Project :	
Model # :	
Item # :	Qty :
Available W/H :	
Approval :	

Sandwich/Salad Unit - Drawers

Food Prep Tables-Sandwich/Salad Prep
Super Deluxe Series

Model : TST-28SD-D2

EXCEPTIONAL 3 YEAR PARTS & LABOR WARRANTY

- Drawer pans not included.

FEATURES / BENEFITS

Stainless Steel Cabinet Construction
The Turbo Air Super Deluxe model boasts a stainless steel interior and exterior (galvanized steel back & bottom). It guarantees the utmost in cleanliness and long product life. The Super Deluxe can add a touch of style to the most refined setting.

Convenient Cutting Board Side Rail
Our cutting board is 9 1/2" deep and 1/2" thick to provide ample working space, and is made of easy to use and sanitize LDPE (Low Density Polyethylene). The new side rail cutting board bracket makes it easy to secure and remove the cutting board and it accepts different sizes too (max. 1/2" thickness)

Hot Gas Condensate System
Through Turbo Air's creative innovation, the condensate system surfaces have been specially treated to resist corrosion. This not only increases efficiency without the risk of refrigerant leakage from corrosion, but also prevents the overflow of condensate water.

Insulated Pan Cover

High-Density Polyurethane Insulation
The entire cabinet structure and solid doors are foamed-in-place high density, CFC free polyurethane insulation.

Efficient Refrigeration System
Turbo Air's solid door refrigerators are designed with oversized and balanced (CFC Free R-134A) refrigeration systems. These include efficient evaporators and condensers for faster cooling and greater efficiency.

Magnetic Door Gaskets
Magnetic door and drawer gaskets are of one piece construction, removable without tools for ease of cleaning and replacement.

Heavy Duty Stainless Steel Drawers
Durable stainless steel drawers include stainless steel liners and drawer frames. Customers' fatigue fades away with recessed handles and easy gliding rollers. Each drawer can hold two(2) full size (12"L x 20"W x 8"D) food pans. (Food pans and divider bars sold separately)

Refrigerator Holds 33°F ~ 39°F for the Best in Food Preservation

Model	Swing Door	Drawers	CU./FT.	#of Shelves	#of Pans	HP	AMPS	Crated Weight (lbs.)	L x D* x H † (inches)
TST-28SD-D2	-	2	7	-	8	1/3	6.6	205	27 1/2 x 30 x 37

Ver.201301

* Depth does not include 1" for rear spacers. † Height does not include 5-7/8" for caster height.

Sandwich/Salad Unit - Drawers

Food Prep Tables-Sandwich/Salad Prep
Super Deluxe Series

Model : TST-28SD-D2

ELECTRICAL DATA	
Voltage	115/60/1
Plug Type	NEMA-5-15P
Full Load Amperes	6.6
Compressor HP	1/3
Cord Length ft.	9
Refrigerant	R-134A
DIMENSIONAL DATA	
Ext. Length Overall in.	27 1/2 (698mm)
Ext. Depth Overall in.*	30 (762mm)
Ext. Height Overall in.†	37 (940mm)
# of Doors	-
# of Shelves	-
# of Pans	8
Net Capacity cu. ft.	7
Gross Weight lbs.	205
Net Weight lbs.	187

Design and specifications subject to change without notice.
Actual shipping weight may differ due to extra packing materials for product protection.
* Depth does not include 1" for rear spacers.
† Height does not include 5-7/8" for caster height.

PLAN VIEW

(unit : inch)

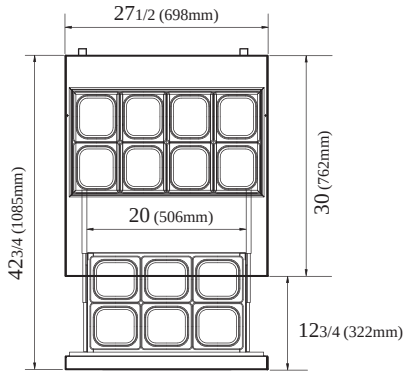

PLAN VIEW

- **WARRANTY :** Exceptional 3 Year Parts and Labor Warranty
  Additional 2 Year Warranty on Compressor

- Self-Contained System
- 4" Dia. Swivel Casters
- Standard 1/6 Size, 4" Deep Condiment Pans Included (top of cabinet)
- 9 1/4" Deep, 1/2" Thick Cutting Board Included
- 2.5" Dia. Casters Available (optional)

- **OPTIONAL ACCESSORIES :**
  - ❑ 2.5" Diameter casters
  - ❑ 5" Diameter casters
  - ❑ 6" ABS plastic legs

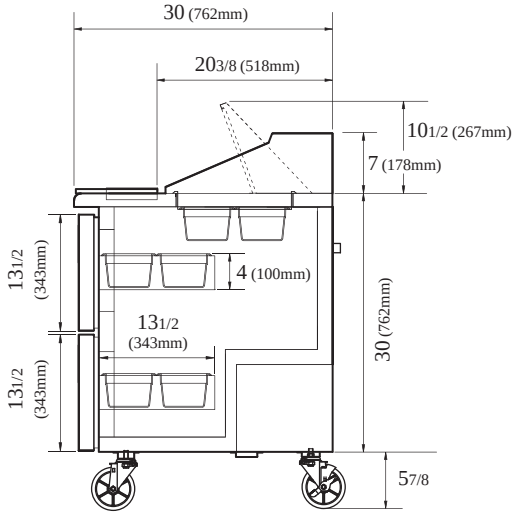

SIDE VIEW

Ver.201301

- **Turbo Air** : 800-627-0032
- **GK** : 800-500-3519
- **Warranty** : 800-381-7770
- **AC** : 888-900-1002