TRUE FOOD SERVICE EQUIPMENT, INC.
2001 East Terra Lane • O'Fallon, Missouri 63366-4434 • (636)240-2400
Fax (636)272-2408 • Toll Free (800)325-6152 • Intl Fax# (001)636-272-7546
Parts Dept. (800)424-TRUE • Parts Dept. Fax# (636)272-9471 • www.truemfg.com

Project Name: _____
Location: _____
Item #: _____ *Qty:* _____
Model #: _____

AIA #
SIS #

Model:
TD-65-24

Underbar Refrigeration:
Solid Slide Lid Deep Well Horizontal Bottle Cooler

TD-65-24

- True's horizontal bottle coolers are designed with enduring quality and value. Our commitment to using the highest quality materials and oversized refrigeration assures colder product temperatures and years of trouble free service.
- Oversized, factory balanced, refrigeration system holds 33°F to 38°F (.5°C to 3.3°C).
- Forced-air cooling. Positively guided airflow cools bottles on top first. Evaporator coil virtually runs length of cooler for balanced temperatures throughout the cabinet.
- Exterior - all stainless steel countertop and lid(s), heavy duty, wear resistant laminated black vinyl front and sides, matching black aluminum back.
- Interior - long lasting, heavy duty galvanized steel. NSF-7 approved for packaged and bottled product.
- Evaporator is epoxy coated to eliminate the potential of corrosion.
- Entire cabinet structure is foamed-in-place using Ecomate. A high density, polyurethane insulation that has zero ozone depletion potential (ODP) and zero global warming potential (GWP).
- Heavy duty, 10 mil thick pure grade PVC coated adjustable bin dividers.
- Removable, bottle cap opener(s) and cap catcher(s).

ROUGH-IN DATA

Specifications subject to change without notice.
Chart dimensions rounded up to the nearest ⅛" (millimeters rounded up to next whole number).

Model	Lids	Capacity 12 oz. Btls.	Capacity 12 oz. Cans	Bin Dividers	Cabinet Dimensions (inches) (mm) L	D†	H	HP	Voltage	Amps	NEMA Config.	Cord Length (total ft.) (total m)	Crated Weight (lbs.) (kg)
TD-65-24	2	22 Cases	32.5 Cases	4	64⅝ 1642	26⅝ 677	33⅜ 848	⅓ ⅓	115/60/1 230-240/50/1	8.6 4.2	5-15P ▲	7 2.13	345 157

† Depth does not include 1½" (39 mm) for cap catcher and 1" (26 mm) for rear bumpers.
note: 12 oz. bottles refers to 12 oz. longneck bottles.

▲Plug type varies by country.

MADE IN U.S.A. SINCE 1945 · 5 YEAR COMPRESSOR WARRANTY USA

8/14 Printed in U.S.A.

APPROVALS:

AVAILABLE AT:

Model:
TD-65-24

Underbar Refrigeration:
Solid Slide Lid Deep Well Horizontal Bottle Cooler

STANDARD FEATURES

DESIGN
- True's refrigerated horizontal bottle coolers are designed with enduring quality and value. Our commitment to using the highest quality materials and oversized refrigeration assures colder product temperatures and years of trouble free service.

REFRIGERATION SYSTEM
- Factory engineered, self-contained, capillary tube system using environmentally friendly (CFC free) 134A refrigerant.
- Extra large evaporator coil balanced with higher horsepower compressor and large condenser; maintains cabinet temperatures of 33°F to 38°F (.5°C to 3.3°C).
- Sealed, cast iron, self-lubricating evaporator fan motor(s) and larger fan blades give True bottle coolers a more efficient low velocity, high volume airflow design. This unique design ensures colder standard temperatures and faster recovery in high use situations.
- Condensing unit accessed from behind front grill, slides out for easy maintenance.
- Forced-air cooling. Positively guided air flow cools bottles on top first. Evaporator coil virtually runs length of cooler for balanced temperatures throughout the cabinet.

CABINET CONSTRUCTION
- Exterior - all stainless steel countertop and lid(s), heavy duty, wear resistant laminated black vinyl front and sides, matching black aluminum back.
- Interior - long lasting, heavy duty galvanized steel.
- Insulation - entire cabinet structure is foamed-in-place using Ecomate. A high density, polyurethane insulation that has zero ozone depletion potential (ODP) and zero global warming potential (GWP).
- Welded, heavy duty steel frame rail, black powder coated for corrosion protection.
- Removable, bottle cap opener(s) and cap catcher(s).

BIN DIVIDERS
- Four (4) heavy duty, 10 mil thick pure grade PVC coated adjustable bin dividers to maximize storage.

MODEL FEATURES
- Evaporator is epoxy coated to eliminate the potential of corrosion.
- Barrel locks standard.
- Listed under NSF-7 for the storage and/or display of packaged or bottled product.

ELECTRICAL
- Unit completely pre-wired at factory and ready for final connection to a 115/60/1 phase, 15 amp dedicated outlet. Cord and plug set included.

115/60/1
NEMA-5-15R

OPTIONAL FEATURES/ACCESSORIES
Upcharge and lead times may apply.
- ❑ 230 - 240V / 50 Hz.
- ❑ 6" (153 mm) standard legs.
- ❑ 6" (153 mm) seismic/flanged legs.
- ❑ 2½" (64 mm) diameter rail castors.
- ❑ 3" (77 mm) diameter rail castors.
- ❑ Ratchet locks and handles. Requires one per lid.
- ❑ Remote cabinets (condensing unit supplied by others; system comes standard with 404A expansion valve and requires R404A refrigerant). Consult factory technical service department for BTU information. All remote units must be hard wired during installation.

PLAN VIEW

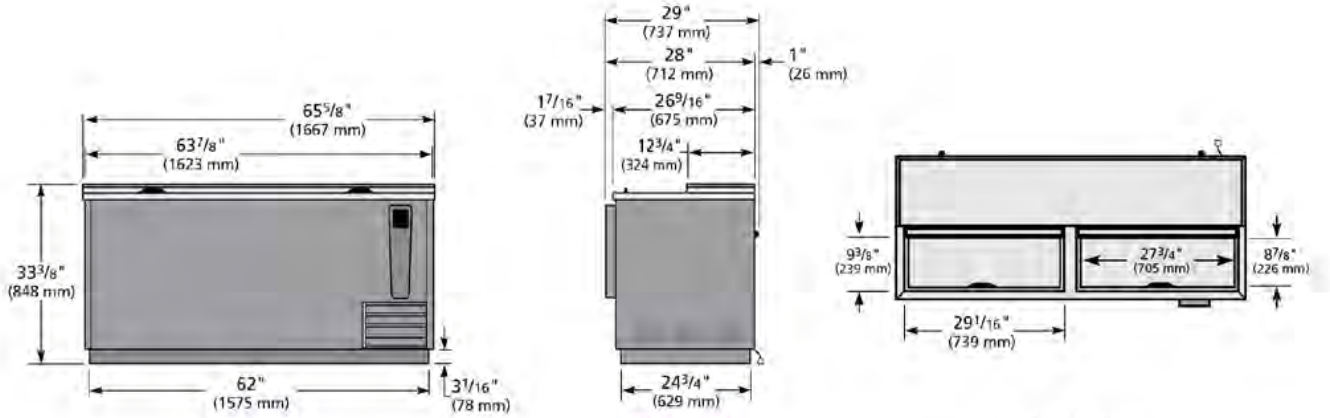

WARRANTY*
Three year warranty on all parts and labor and an additional 2 year warranty on compressor. (U.S.A. only)

*RESIDENTIAL APPLICATIONS: TRUE assumes no liability for parts or labor coverage for component failure or other damages resulting from installation in non-commercial or residential applications.

METRIC DIMENSIONS ROUNDED UP TO THE NEAREST WHOLE MILLIMETER

SPECIFICATIONS SUBJECT TO CHANGE WITHOUT NOTICE

Model	Elevation	Right	Plan	3D	Back
TD-65-24	TFKY02E	TFKY01S	TFKY02P	TFKY023	

TRUE FOOD SERVICE EQUIPMENT
2001 East Terra Lane • O'Fallon, Missouri 63366-4434 • (636)240-2400 • Fax (636)272-2408 • Toll Free (800)325-6152 • Intl. Fax# (001)636-272-7546 • www.truemfg.com