C0630 - 600lb Cube Ice Machine

Prodigy Plus® Modular Cube Ice Machine

The world's smartest cuber.

As the world's only self-monitoring cuber, the new Scotsman Prodigy Plus® cube ice machines make it easier than ever to maintain your equipment and save money. Whether it's the advanced ice level control or an optional feature board for quick diagnostics, this is ice-making re-imagined. And with intuitive technology like AutoAlert™ indicator lights, a reduced operational footprint and easy-access service from the front panel, Prodigy Plus® cubers are simply the smartest, most reliable way to create fresh-tasting ice — every time.

The Prodigy Plus® difference.

- AutoAlert™ indicator lights for better visibility
- Operational footprint among the industry's smallest
- Industry-exclusive QR code instantly connects users to service information and warranty history
- One-touch cleaning reduces labor costs and saves time
- Front-located air filter for more efficient operation
- Self-aligning front panel for easy access to key components
- Patented WaterSense purge control automatically reduces scale buildup
- Patented Harvest Assist efficiently moves cube ice to the bin
- Smart-Board™ advanced feature module available for additional diagnostic capabilities
- Optional Vari-Smart™ ice level control allows operators to customize ice levels
- Antimicrobial protection guards internal surfaces between cleanings
- A full range of water- and energy-saving features

B530P

B530S

B842S

24 Hour Volume Production

Air Cooled			Remote			Water Cooled		
70˚F/21˚C 50˚F/10˚C	Air Water	90˚F/32˚C 70˚F/21˚C	70˚F/21˚C 50˚F/10˚C	Air Water	90˚F/32˚C 70˚F/21˚C	70˚F/21˚C 50˚F/10˚C	Air Water	90˚F/32˚C 70˚F/21˚C
776/353 lb/kg		528/240 lb/kg	684/311 lb/kg		616/280 lb/kg	722/328 lb/kg		650/295 lb/kg

Modular Bin Options

Model Number*	Dimensions W" x D" x H"	AHRI Certified Bin Capacity lb/kg	Application Capacity lb/kg	Finish	Ship Weight lb/kg
B530P	30 x 34 x 44**	420/191	536/244	Poly	150/68
B530S	30 x 34 x 44**	420/191	536/244	Metallic	150/68
B842S	42 x 34 x 44**	610/277	778/353	Metallic	185/84

* Contact Scotsman for bin top requirements. ** Add 6" Height for bin legs.

Cube Ice

Common ice form, ideal for mixed drinks.

Small Cube
7/8" x 7/8" x 3/8"
(2.22 x 2.22 x .95 cm)

Medium Cube
7/8" x 7/8" x 7/8"
(2.22 x 2.22 x 2.22 cm)

Certification

NAFEM DATA PROTOCOL COMPLIANT · AHRI CERTIFIED · REVIT by Scotsman · CERTIFIED ISO 9001:2008 · CE · agion · c UL us · NSF

Warranty

- 3 years parts and labor on all components.
- 5 years parts and labor on the evaporator.
- 5 years parts on the compressor and condenser.
- Warranty valid in North, South & Central America for commercial installations.
- Contact factory for warranty in other regions.

Scotsman
ICE THE WORLD DEMANDS

775 Corporate Woods Parkway, Vernon Hills, IL 60061
1-800-SCOTSMAN • Fax: 847-913-9844 • www.scotsman-ice.com • customer.relations@scotsman-ice.com

C0630 - 600lb Cube Ice Machine

C0630 - 600lb Cube Ice Machine

Prodigy Plus® Modular Cube Ice Machine

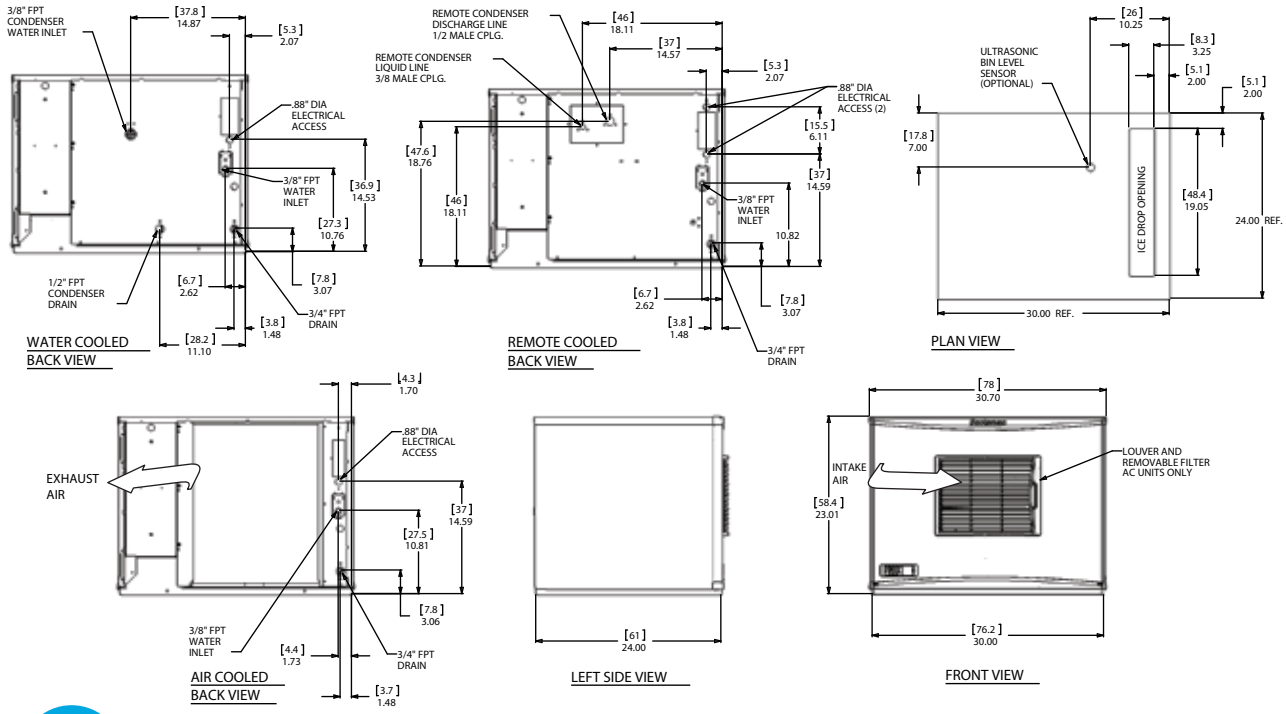

Specifications

	Model Number (Cube Size: medium or small)	Condenser Unit	Basic Electrical Volts/Hz/Phase	Max. Fuse Size or HACR Circuit Breaker (amps)	Circuit Wires	Min. Circuit Ampacity	Energy Consumption kWh/100 lb (45.4 kg) 90˚F(32˚C)/70˚F(21˚C)	Water Usage Gallons/100 lb (liters/45.4 kg) Potable 90˚F(32˚C)	Condenser 70˚F(21˚C)	Energy Star®
med.	C0630MA-32	Air	208-230/60/1	20	2	18.2	6.0	19.1/72.4	-	
	C0630MR-32	Remote	208-230/60/1	20	2	18.0	5.8	18.7/70.9	-	✓
	C0630MW-32	Water	208-230/60/1	20	2	17.0	4.1	18.6/70.5	173.0/656.0	
sm.	C0630SA-32	Air	208-230/60/1	20	2	18.2	6.0	19.1/72.4	-	
	C0630SR-32	Remote	208-230/60/1	20	2	18.0	5.8	18.7/70.9	-	✓
	C0630SW-32	Water	208-230/60/1	20	2	17.0	4.1	18.6/70.5	173.0/656.0	

All Models

Dimensions (W x D x H):

Unit: 30" x 24" x 23" (76.2 x 61.0 x 58.4 cm)

Shipping Carton: 33.5" x 27.5" x 28" (85.1 x 69.9 x 71.1 cm)

Shipping Weight: 190 lb / 86 kg

BTUs per hour: 12,700

Refrigerant: R-404A

Accessories

Model Number	Description
KVS	Vari-Smart™ Ice Level Control - Program ice bin levels to match ice needs.
KSBU	Smart-Board™ Advanced Control - Use additional operational data for fast diagnosis.
KSBU-N	Smart-Board™ Advanced Control with Network - Network capable.
ERC311-32	Remote condenser for C0630xR, 208-230/60/1 - Consult remote condenser spec sheet for details
RTE10	Line set, precharged, R-404A, 10ft.
RTE25	Line set, precharged, R-404A, 25ft.
RTE40	Line set, precharged, R-404A, 40ft.
RTE75	Line set, precharged, R-404A, 75ft.
KPAS	Prodigy Advanced Sustainability Kit - Includes KVS and KSBU - N

Scotsman recommends all ice machines have water filtration. See Scotsman water filter specification sheet for details.

Operating Requirements

	Minimum	Maximum
Air Temperatures	50°F (10°C)	100°F (38°C)
Water Temperatures	40°F (4.4°C)	100°F (38°C)
Remote Cond. Temps	-20°F (-29°C)	120°F (49°C)
Water Pressures	20 PSIG (1.4 bar)	80 PSIG (5.5 bar)
Electrical Voltage	-5%	+10%

Specifications and design are subject to change without notice.

775 Corporate Woods Parkway, Vernon Hills, IL 60061
1-800-SCOTSMAN • Fax: 847-913-9844 • www.scotsman-ice.com • customer.relations@scotsman-ice.com

Scotsman
ICE THE WORLD DEMANDS

© 2015 Scotsman Ice Systems.

C0630 - 600lb Cube Ice Machine

B230P, B322S, B330P, B530P/S, B842S, B948S - Storage Bins

Modular Storage Bins

B530S show with optional KLP8S legs.

Features

- New sleek, contemporary styling. A perfect match to Prodigy Plus® cube ice machines and other Scotsman ice machines.
- Convenient, built-in scoop holder (except for B230P).
- Easily removable baffle, no tools required for cleaning (except for B230P).
- Lightweight.
- Unique recessed drain fitting for maximum installation flexibility.
- Corrosion resistant.
- Spring loaded door with hidden hinges for easy opening and closing (except for B230P).
- Available in metallic finish or durable rotocast plastic.
- AHRI, NSF certified.
- Ice scoop included.

Certification

Storage Capacity

B322S		B230P		B330P	
APPLICATION Capacity	AHRI Capacity	APPLICATION Capacity	AHRI Capacity	APPLICATION Capacity	AHRI Capacity
370/168 lb/kg	290/132 lb/kg	242/110 lb/kg	190/86 lb/kg	344/156 lb/kg	270/123 lb/kg

B530P/S		B842S		B948S	
APPLICATION Capacity	AHRI Capacity	APPLICATION Capacity	AHRI Capacity	APPLICATION Capacity	AHRI Capacity
536/244 lb/kg	420/191 lb/kg	778/353 lb/kg	610/277 lb/kg	893/406 lb/kg	700/319 lb/kg

Application capacity is based on 90% of total volume in the cubic feet x 34 lb/ft^3

Polyurethane Insulation

Foam insulation is forced between the wall and liner under heat and pressure to form a perfect wall to wall bond, preserving ice supply for long periods.

Bin Interior

The polyethylene bin interior is sanitary and easy to clean. Resists scratches and scuffs from ice scoops.

Warranty

- 3 years parts and labor on all components.
- Warranty valid in North, South & Central America for commercial installations.
- Contact factory for warranty in other regions.

775 Corporate Woods Parkway, Vernon Hills, IL 60061
1-800-SCOTSMAN • Fax: 847-913-9844 • www.scotsman-ice.com • customer.relations@scotsman-ice.com

B230P, B322S, B330P, B530P/S, B842S, B948S - Storage Bins

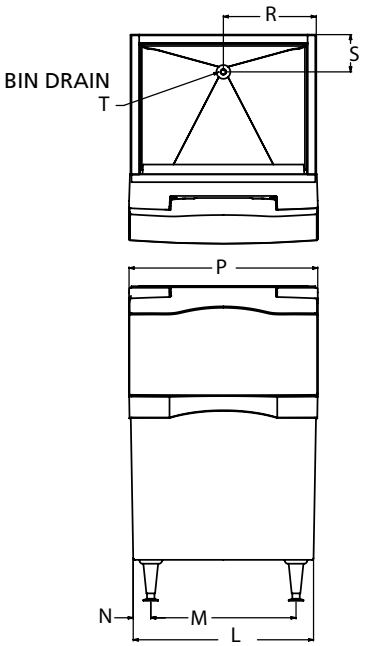

Installation Note: Allow 6" space at back for utility connections.

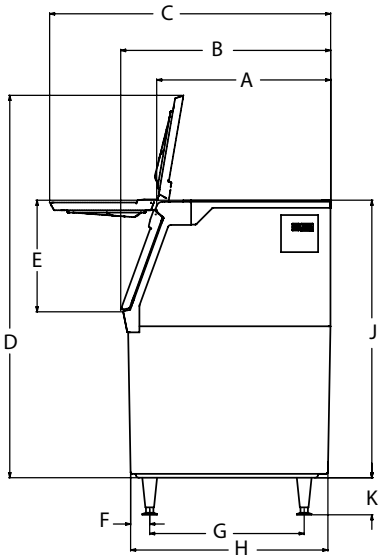

Dimensions

Model #	A	B	C	D	E	F	G	H	J	K	L	M	N	P	R	S	T
B230P	26.75	32	37.5	32.75	10	2.25	26.5	31.00	28	6	30	25.5	2.25	30.63	15	2	.75 NPT
B322S	28.23	34	45.5	61.24	18	3.88	25	32.75	44	6	22	15.5	3.25	22.5	11	6	.75 NPT
B330P	28.15	34	45.5	47.24	18	3.33	25	32.42	31	6	30	23.5	3.08	30.5	15	6	.75 NPT
B530P/S	28.15	34	45.5	61.24	18	3.09	25	31.93	44	6	30	23.5	2.83	30.5	15	6	.75 NPT
B842S	28.07	34	45.5	61.87	18	3.88	25	32.75	44	6	42	35.5	3.25	42.5	21	6	.75 NPT
B948S	28.05	34	45.5	61.24	18	3.88	25	32.75	44	6	48	41.5	3.25	48.5	24	6	.75 NPT

Overall Dimensions

Model #	Carton (W x D x H)
B230P	30" x 31" x 28"
B322S	22" x 34" x 44"
B330P	30" x 34" x 31"
B530P	30" x 34" x 44"
B530S	30" x 34" x 44"
B842S	42" x 34" x 44"
B948S	48" x 34" x 44"

Shipping Information

Model #	Carton (W x D x H)	Weight (lb/kg)
B230P	32" x 36" x 32"	74/34
B322S	24" x 36" x 47"	104/47
B330P	32" x 36" x 33"	90/41
B530P	32" x 36" x 47"	110/50
B530S	32" x 36" x 47"	132/60
B842S	44" x 36" x 47"	174/79
B948S	50" x 36" x 47"	196/89

Accessories*

Model Number	Description
KBC1	Kit, bit casters for B530S, B842S, B948S and SB380.** Not for use with B322S or SB480 when using extensions.
KBC1P	Kit, bin casters for B330P and B530P.**
KLP7	Kit, legs, 6", flanged feet, for B bins, HD dispensers, AFE, CU1/2/3 and NSE.
KLP8S	Kit, legs, 6", stainless steel, for B bins, HD dispensers, AFE, CU1/2/3 and NSE.
BGS10	Bagger, hooks on any bin.
KBAG	Kit, bags, 1000, for BGS10.
KSEALER	Kit, tape sealer, for BGS10.
KTAPE	Kit, tape, 180 ft. roll, for BGS10.
KHOLDER	Kit, scoop holder, stainless steel.

*None of the above listed accessories are available for use with the B230P bin.
**3.5" Diameter, 2 locking, raises bin 4.5".

775 Corporate Woods Parkway, Vernon Hills, IL 60061
1-800-SCOTSMAN • Fax: 847-913-9844 • www.scotsman-ice.com • customer.relations@scotsman-ice.com

Scotsman
ICE THE WORLD DEMANDS

© 2015 Scotsman Ice Systems.