MAXX ICE

Model **MIM50**

Project Name:	
Location:	
Item:	Qty:
Model:	

Ice Maker - Self Contained

Model MIM50

FEATURE LIST	
Model:	MIM50
Description:	Self-Contained Ice Maker
Voltage:	120V/60Hz/1Ph, 220V/50Hz/1Ph
Amps:	4.8
Ice Type:	Slab Cube
Ice Cube Size:	3/4" x 3/4" x 1" 19mm x 19mm x 25mm
Power Consumption:	13.2kWh / 100lbs of ice
Unit Weight:	84 lb / 38 kg
Unit Dimensions:	14 5/8" W x 23 5/8" D x 33 1/2" H 371mm W x 600mm D x 851mm H
Shipping Weight:	93 lb / 42 kg
Shipping Dimensions:	17" W x 26 3/4" D x 38" H 432mm W x 678mm D x 965mm H

The compact MIM50 produces up to 50 pounds of ice per day and includes a self-contained 25 pound storage bin. The unit produces crystal clear ice cubes and features a reversible stainless steel door. Suitable for freestanding or built in applications, this unit will run on standard household electrical current and is NSF and UL approved for commercial use.

Maxx Ice's continuing comitment to quality products may mean a change in specification or pricing without notice.

MAXX ICE
3355 Enterprise Avenue Fort Lauderdale, FL 33331
Tel: 954.202.7336 www.thelegacycompanies.com

July 2013

Ace Mart Restaurant Supply - Stores

MAXX ICE

Model **MIM50**

PLAN VIEW

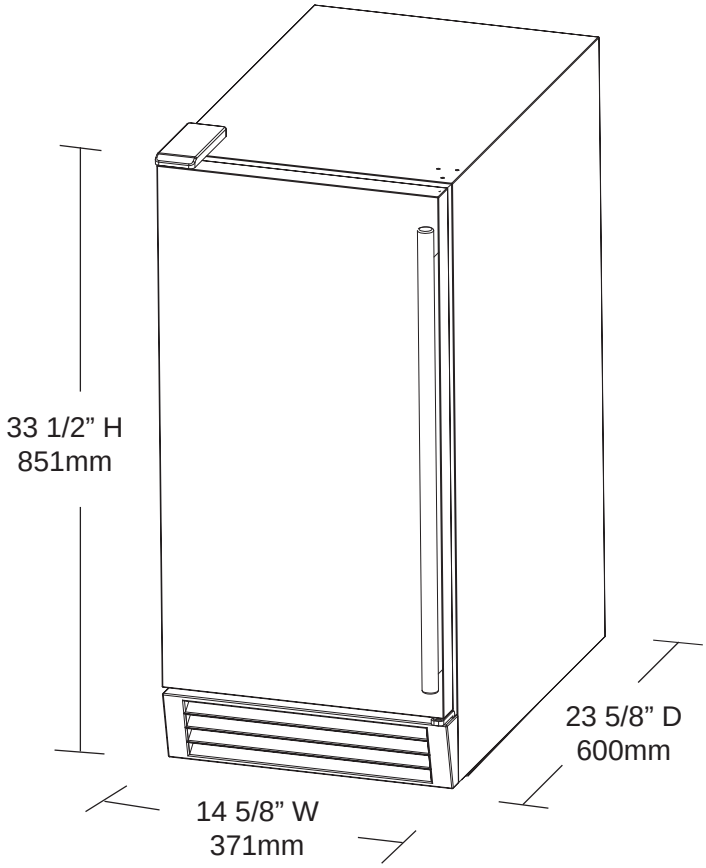

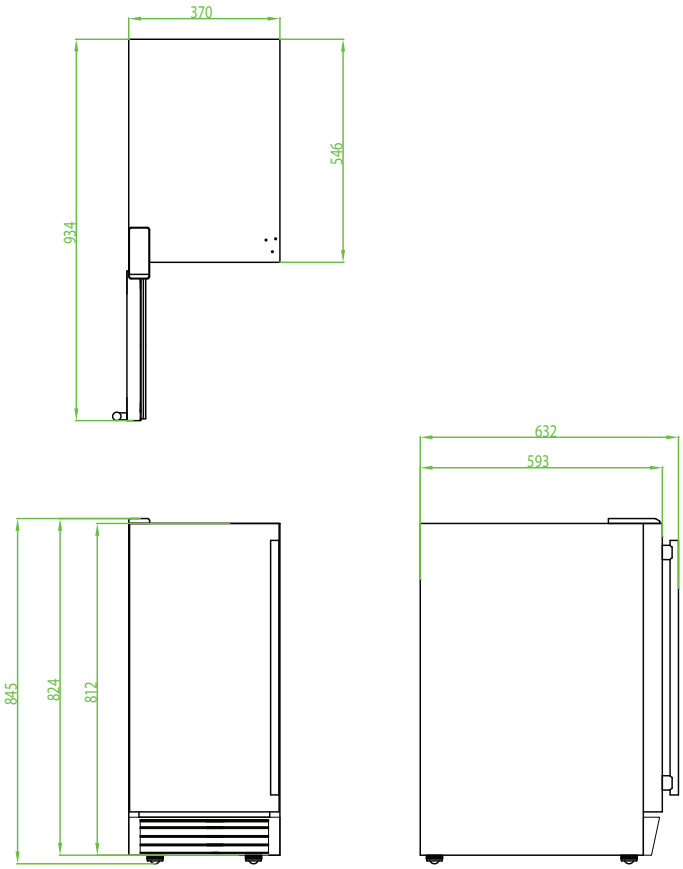

- Up to 50 lb (23 kg) daily ice production (based on 50/70° F)
- Produces crystal clear ice cubes
- Stainless steel exterior
- 25lb storage bin with automatic overflow prevention
- Reversible stainless steel door
- Air-cooled condenser
- Designed for household or commercial use
- For freestanding or built-in applications
- Requires use of a drain. Water filter recommended.

MAXX ICE
3355 Enterprise Avenue Fort Lauderdale, FL 33331
Tel: 954.202.7336 www.thelegacycompanies.com

Ace Mart Restaurant Supply - Stores