Manitowoc

Indigo™ thinking inside the box

Indigo™ Series 500 Ice Cube Machine

Model: ☐ IR-0500A ☐ ID-0502A ☐ IY-0504A ☐ IR-0501W ☐ ID-0503W ☐ IY-0505W ☐ ID-0592N ☐ IY-0594N

ENERGY STAR PARTNER

Indigo Series i-500
Ice Machine on B-570 Bin

Designed for operators who know that ice is critical to their business, the Indigo™ Series ice machine's preventative diagnostics continually monitor itself for reliable ice production. Improvements in cleanability and programmability make your ice machine easy to own and less expensive to operate.

- **Space-Saving Design** – Up to 560 lbs. (254 kgs.) daily ice production and only 30" (76.20 cm) wide.
- **Intelligent Diagnostics** – provide 24 hour preventative maintenance and diagnostic feedback for trouble free operation.
- **Acoustical Ice Sensing Probe** – for reliable operation in challenging water conditions.
- **EasyRead Display** – communicates operating status, cleaning reminders, and asset information through a blue illuminated display.
- **Programmable Ice Production** – by On/Off Time, Ice Volume or Bin Level (with accessory bin level control) further improves energy efficiency and savings.
- **Easy to Clean Foodzone** – Hinged front door swings out for easy access. Removable water-trough, distribution tube, curtain, and sensing probes for fast and efficient cleaning. Select components made with AlphaSan® antimicrobial.
- **DuraTech™ Exterior** – provides superior corrosion resistance. Stainless finish with innovative clear-coat resists fingerprints and dirt.
- Available **LuminIce™ Growth Inhibitor** controls the growth of bacteria and yeast within the foodzone.

COMMERCIAL WARRANTY

ICE MAKER	EVAPORATOR	COMPRESSOR
3 YEAR	5 YEAR	5 YEAR PARTS
PARTS AND LABOR		3 YEAR LABOR

Specifications

BTU Per Hour:

6,100 (average) 6,900 (peak)

Refrigerant:

R-404A CFC-free

Operating Limits:

- Ambient Temperature Range:
  35˚ to 110˚F (1.7˚ to 43.3˚C)
  Water Temperature Range:
  35˚ to 90˚F (1.7˚ to 32.2˚C)
- Water Pressure Ice Maker Water In:
  Min. 20 psi (137.9 kPA)
  Max. 80 psi (551.1 kPA)

Ice Machine Electric

115/60/1 standard.
(208-230/60/1 and 230/50/1 available in Air and Water-Cooled models only)

Minimum circuit ampacity:

Air cooled:	14.2
Water Cooled:	13.5
Remote:	20.0

Maximum fuse size:

Air Cooled:	20.0
Water Cooled:	20.0
Remote:	25.0

Ice Shape

Half Dice
3/8" x 1 1/8" x 7/8"
(.95 x 2.86 x 2.22 cm)

Dice
7/8" x 7/8" x 7/8"
(2.22 x 2.22 x 2.22 cm)

Regular
1 1/8" x 1 1/8" x 7/8"
(2.86 x 2.86 x 2.22 cm)

CALIFORNIA LOW LEAD QUALIFIED Conforms to NSF 61 Annex G · AHRI CERTIFIED www.ahricertified.org · NSF · c UL US LISTED · CE · AutoQuotes · QUALITY MANAGEMENT SYSTEM CERTIFIED BY DNV ISO 9001:2008

2110 South 26th Street
PO Box 1720
Manitowoc, WI 54221-1720 USA

Tel: 1.920.682.0161
Fax: 1.920.683.7589

www.manitowocice.com

Manitowoc

Indigo™ Series 500 Ice Cube Machine

Manitowoc

Indigo™ Series 500 Ice Cube Machine

i-500 on B-570 Storage Bin

Ⓐ Electrical Entrance (2) Options
Ⓑ 3/8" (0.95 cm) F.P.T. Water Condenser Inlet (water-cooled units)
Ⓒ 1/2" (1.27 cm) F.P.T. Water Condenser Outlet (water-cooled units)
Ⓓ 1/2" (1.27 cm) Auxillary Base Drain Socket
Ⓔ 3/8" (0.95 cm) F.P.T. Ice Making Water Inlet
Ⓕ 1/2" (1.27 cm) F.P.T. Ice Making Water Drain
Ⓖ 3/4" (1.91 cm) Bin Drain

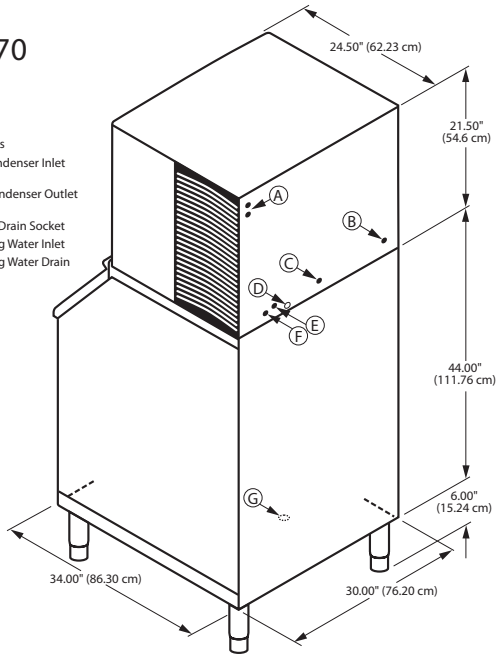

Installation Note
Minimum installation clearance:

Top/sides: 8" (20.32 cm); Back is 5" (12.7 cm)

Space-Saving Designs

	i-500 B-400	i-500 B-570
Height	59.50" 151.13 cm	71.50" 181.61 cm
Width	30.00" 76.20 cm	30.00" 76.20 cm
Depth	34.00" 86.30 cm	34.00" 86.30 cm
Bin Storage	290 lbs. 131.54 kgs.	430 lbs. 195.04 kgs.

Height includes adjustable bin legs 6.00" to 8.00", (15.24 to 20.32 cm) set at 6.00" (15.24 cm).

Specifications

	Model	Ice Shape	Ice Production 24 Hours 70°Air/50°F Water	Ice Production 24 Hours 90°Air/70°F Water	Power Usage kWh/100 lbs.@90°Air/70°F 1 Ph	Water Usage/100 lbs. 45.4 kgs. of Ice Potable Water	ENERGY STAR®
AIR-COOLED	IR-0500A	regular	500 lbs.	370 lbs.	5.94	19.9 Gal.	★
			227 kgs.	168 kgs.		75.3 L	
	ID-0502A	dice	530 lbs.	390 lbs.	5.79	19.9 Gal.	★
			240 kgs.	177 kgs.		75.3 L	
	IY-0504A	half-dice	560 lbs.	410 lbs.	5.73	19.9 Gal.	★
			254 kgs.	186 kgs.		75.3 L	
WATER-COOLED	IR-0501W	regular	500 lbs.	420 lbs.	4.58	19.9 Gal.	NA
			227 kgs.	191 kgs.		75.3 L	
	ID-0503W	dice	550 lbs.	430 lbs.	4.58	19.9 Gal.	NA
			249 kgs.	195 kgs.		75.3 L	
	IY-0505W	half-dice	550 lbs.	440 lbs.	4.52	19.9 Gal.	NA
			249 kgs.	200 kgs.		75.3 L	
	* Water-cooled Condenser Water Usage / 100 lbs. /45.4 kgs. of Ice: 165 gal/625 L. * Water-cooled models are excluded from ENERGY STAR qualification.						
REMOTE-COOLED	ID-0592N	dice	480 lbs.	430 lbs.	5.79	19.9 Gal.	★
			218 kgs.	195 kgs.		75.3 L	
	IY-0594N	half-dice	510 lbs.	440 lbs.	5.73	19.9 Gal.	★
			231 kgs.	200 kgs.		75.3 L	

Order ice storage bin separately. Ice storage bin and JC-0495 remote condenser must be ordered separately. Consult remote condenser specification sheet for details.

Accessories

LuminIce™ Growth Inhibitor
reduces yeast and bacteria growth for a cleaner ice machine.

Bin Level Control
Allows ice bin level to be automatically set. Built-in LED light illuminates bin.

Arctic Pure® Water Filters
Reduces sediment and chlorine odors for better tasting ice.

AuCS®
schedules and performs routine ice machine cleaning automatically.

4769B ©2011 Manitowoc 11/11 Continuing product improvement may necessitate change of specifications without notice.

2110 South 26th Street
PO Box 1720
Manitowoc, WI 54221-1720 USA

Tel: 1.920.682.0161
Fax: 1.920.683.7589
www.manitowocice.com

Manitowoc