Item # _____

Quantity _____

C.S.I. Section 11400

HOBART
701 S Ridge Avenue, Troy, OH 45374
1-888-4HOBART • www.hobartcorp.com

LEGACY® HL300 MIXER

STANDARD FEATURES

- Heavy-Duty ¾ H.P. Motor
- Gear Transmission
- Three Fixed Speeds Plus Stir Speed
- Shift-on-the-Fly™ Controls
- Patented soft start Agitation Technology
- 15-Minute SmartTimer™
- Automatic Time Recall
- Large, Easy-To-Reach Controls
- Single Point Bowl Installation
- Ergonomic Swing-Out Bowl
- #12 Taper Attachment Hub
- Open Base
- Stainless Steel Bowl Guard
- Metallic Gray Hybrid Powder Coat Finish
- Rubber Foot Pads Provided

ACCESSORY PACKAGES - featuring Hobart Quick Release™ Agitators

❑ ***Deluxe Accessory Package Includes:***
- 30 Quart Stainless Steel Bowl
- 30 Quart "B" Beater
- 30 Quart "D" Wire Whip
- 30 Quart Bowl Scraper
- 30 Quart Ingredient Chute

❑ ***Standard Accessory Package Includes:***
- 30 Quart Stainless Steel Bowl
- 30 Quart "B" Beater
- 30 Quart "D" Wire Whip

MODELS

❑ HL300 – 30-Quart All Purpose Mixer

❑ HL300C – 30-Quart All Purpose Mixer with Maximum Security Correctional Package

OPTIONS

❑ SmartPlus2™ Programmable Recipe Timer

Specifications, Details and Dimensions on Inside and Back.

HOBART

LEGACY® HL300 MIXER

Ace Mart Restaurant Supply - Stores

LEGACY®
HL300 MIXER

HOBART
701 S Ridge Avenue, Troy, OH 45374
1-888-4HOBART • www.hobartcorp.com

SOLUTIONS/BENEFITS

¾ H.P. Motor
Durability
- Heavy-duty to meet the most demanding operations

Gear Transmission
Durability, Reliability
- Ensures consistent performance and minimum downtime under heavy loads

Three Fixed Speeds plus Stir Speed
Flexibility, Reliability, Consistency
- For incorporating, blending, mixing ingredients
- Supports consistent results and thorough mixing

Shift-on-the-Fly™ Controls
Flexibility
- Allows operator to change speeds while mixer is running

Patented soft start Agitation Technology
Sanitation
- Each speed has a soft transition into a higher speed to reduce the chances of product splash-out

15-Minute SmartTimer™
Convenience, Ease of Use, Consistency
- Supports recipe mixing times
- Provides accurate results and eliminates overmixing

Automatic Time Recall
Productivity, Consistency
- Remembers the last time set for each speed
- Great for multiple batches

Ergonomic Swing-Out Bowl
Ease of Use, Convenience
- Easy loading and unloading of products
- Single Point Bowl Installation allows for simple mounting and removal of bowl
- Bowl Interlock ensures mixer bowl is properly in place for mixer to operate

Stainless Steel Bowl Guard
Protection
- Safety interlock prevents operation when front portion of guard is out of position

Hobart Accessories
Durability, Flexibility, Simplicity
- Hobart Quick Release™ agitators allow for simple installation and removal from agitator shaft
- Hobart accessories are designed for long-term usage under heavy-duty conditions
- Large array of accessories provide multiple uses for recipe and product processing

HL300 MIXER CAPACITY CHART

Recommended Maximum Capacities - dough capacities based on 70°F. water and 12% flour moisture.

PRODUCT	AGITATORS SUITABLE FOR OPERATION	HL300
CAPACITY OF BOWL (QTS. LIQUID)		30
Egg Whites	D	1½ qts.
Mashed Potatoes	B & C	23 lbs.
Mayonnaise (Qts. of Oil)	B or C or D	12 qts.
Meringue (Qts. of Water)	D	1 qt.
Waffle or Hot Cake Batter	B	12 qts.
Whipped Cream	D or C	6 qts.
Cake, Angel Food (8-10 oz. cake)	C or I	22
Cake, Box or Slab	B or C	30 lbs.
Cake, Cup	B or C	30 lbs.
Cake, Layer	B or C	30 lbs.
Cake, Pound	B	30 lbs.
Cake, Short (Sponge)	C or I	23 lbs.
Cake, Sponge	C or I	18 lbs.
Cookies, Sugar	B	23 lbs.
Dough, Bread or Roll (Lt.-Med.) 60% AR §	ED	45 lbs.□
Dough, Heavy Bread 55% AR §	ED	30 lbs.□
Dough Pie	B & P	27 lbs.
Dough, Thin Pizza 40% AR (max. mix time 5 min.) §‡	ED	14 lbs.□
Dough, Med. Pizza 50% AR §‡	ED	20 lbs.□
Dough, Thick Pizza 60% AR §‡	ED	40 lbs.□
Dough, Raised Donut 65% AR	ED	15 lbs.*
Dough, Whole Wheat 70% AR	ED	40 lbs.□
Eggs & Sugar for Sponge Cake	B & C or I	12 lbs.
Icing, Fondant	B	18 lbs.
Icing, Marshmallow	C or I	3 lbs.
Shortening & Sugar, Creamed	B	24 lbs.
Pasta, Basic Egg Noodle (max. mix time 5 min.)	ED	8 lbs.

NOTE: % AR (% Absorption Ratio) - Water weight divided by flour weight. Capacity depends on moisture content of dough. Above capacities based on 12% flour moisture at 70°F water temperature.

□ 1st Speed

* 2nd Speed

§ If high gluten flour is used, reduce above dough batch size by 10%.

‡ 2nd Speed should never be used on 50% AR or lower products.

USE OF ICE REQUIRES A 10% REDUCTION IN BATCH SIZE.

1 gallon of water weighs 8.33 lbs.

NOTE: Attachment hub should not be used while mixing.

Ace Mart Restaurant Supply - Stores

SPECIFICATIONS

MOTOR:
¾ H.P. high torque motor.

100-120/50/60/1	9.5 Amps
200-240/50/60/1	5.7 Amps
200-240/50/60/3	2.8 Amps
380-460/50/60/3	1.4 Amps

ELECTRICAL:
100-120/50/60/1, 200-240/50/60/1, 200-240/50/60/3 and 380-460/50/60/3 – UL Listed.

CONTROLS:
Magnetic contactor with thermal overload protection. Internally sealed "Start-Stop" push buttons. A 15-minute SmartTimer™ is standard. SmartTimer™ includes **Automatic Time Recall**, which remembers the last time set for each speed. Optional SmartPlus2™ Programmable Recipe Timer allows operators the ability to program up to 4 recipes with 5 steps per recipe. SmartPlus2™ automatically changes speeds and starts timer count-down without operator intervention.

TRANSMISSION:
Gear-driven. Gears are constant mesh heat-treated hardened alloy steel along with anti-friction ball bearings. Grease lubricants furnished to all gears and shafts.

SPEEDS:

	Agitator (RPM)	Attachment (RPM)
Stir	58	34
First (Low)	94	54
Second (Intermediate)	174	100
Third (High)	317	183

BOWL GUARD:
Heavy-duty stainless steel wire front and solid rear portion. Front portion of guard rotates easily to add ingredients and install or remove agitator. It detaches in seconds for cleaning in dishwasher or sink. Rear portion of guard can be quickly cleaned in position. Guard must be in closed position before mixer will operate. Bowl support interlock provides further protection.

BOWL LIFT:
Ergonomic style, hand crank operated, self-locking in top and bottom position.

FINISH:
Metallic Gray Hybrid Powder Coat finish.

ATTACHMENT HUB:
Comes with front-mounted Hobart standard #12 taper attachment hub for use with Hobart #12 size attachments.

ATTACHMENTS AND ACCESSORIES:
The following are available at extra cost:

Stainless Steel Bowl
"B" Flat Beater
"C" Wing Whip
"D" Wire Whip
"ED" Dough Hook
"P" Pastry Knife
"I" Heavy Duty Wire Whip
Bowl Splash Cover
Bowl Scraper
Ingredient Chute
20 Quart Accessories
9" Vegetable Slicer
Meat Chopper Attachment
Stainless Steel Foot Pads
Bowl Truck

Hobart Bowl Scraper

Hobart Ingredient Chute

Listed by Underwriters Laboratories Inc. and certified by NSF International.

Ace Mart Restaurant Supply - Stores

LEGACY®
HL300 MIXER

HOBART
701 S Ridge Avenue, Troy, OH 45374
1-888-4HOBART • www.hobartcorp.com

SPECIFICATIONS

ELECTRICAL SPECIFICATIONS: 100-120/50/60/1, 200-240/50/60/1, 200-240/50/60/3 and 380-460/50/60/3 – UL Listed.

WEIGHT: 394 lbs. net; 411 lbs. domestic shipping.

WARRANTY: Unit has full one-year warranty on parts, labor and mileage against manufacturer's defects. Service contracts are available.

DETAILS AND DIMENSIONS

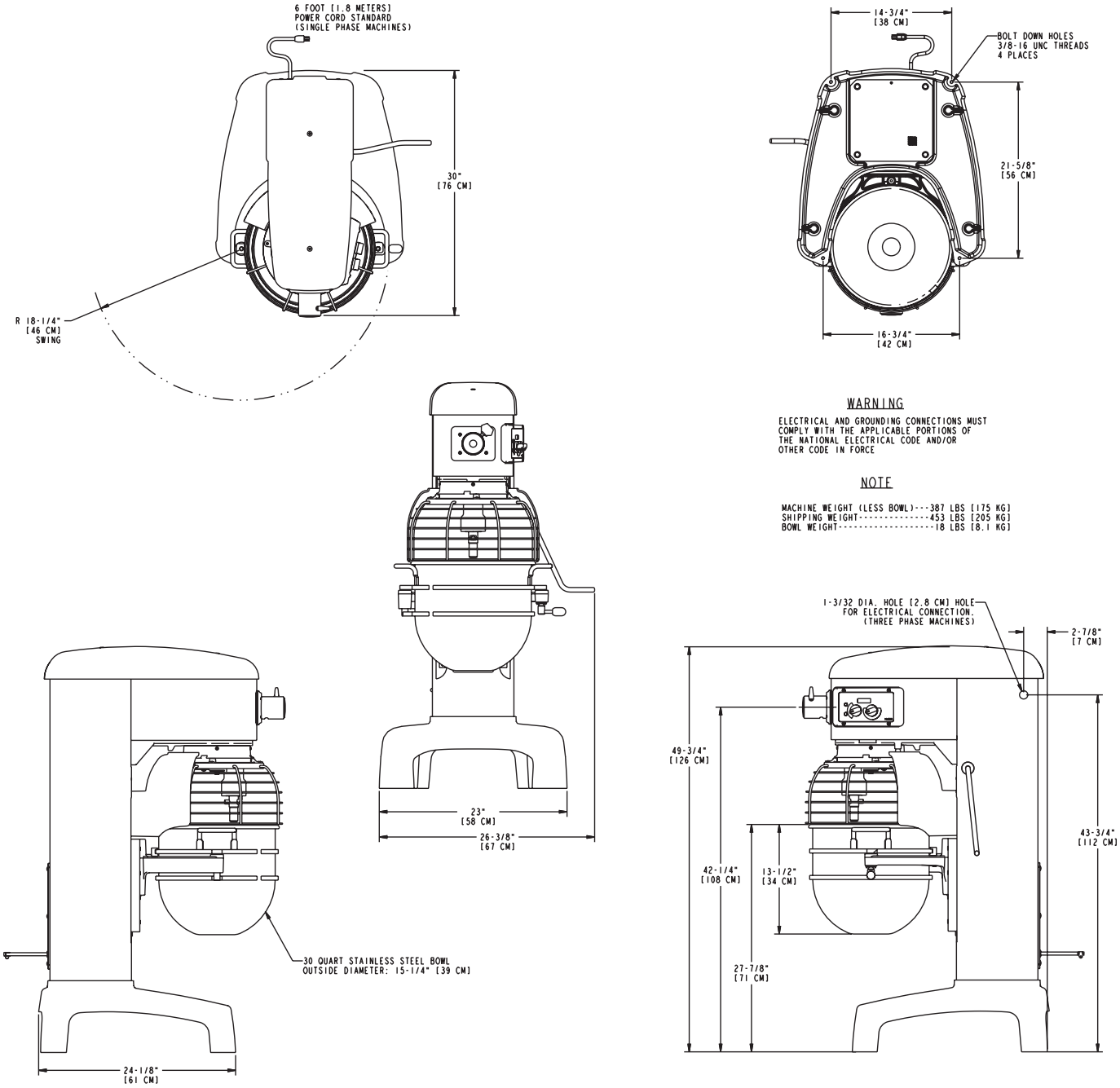

As continued product improvement is a policy of Hobart, specifications are subject to change without notice.

Ace Mart Restaurant Supply - Stores