Item # _____

Quantity _____

C.S.I. Section 11400

HOBART
701 S Ridge Avenue, Troy, OH 45374
1-888-4HOBART • www.hobartcorp.com

HEC5 SERIES ELECTRIC CONVECTION OVENS

STANDARD FEATURES

- Stainless Steel Front, Sides, Top and Back
- Painted Legs
- Stainless Steel Doors with Windows
- 12.5 KW Input
- ½ H.P. Two Speed Oven Blower Motors.
- Solid State Temperature Controls Adjust from 150° to 500°F
- 60 Minute Timer per Section with Audible Alarm
- Oven Cool Switch for Rapid Cool Down
- Porcelain Enamel on Steel Oven Interior
- Five Nickel Plated Oven Racks with Eleven Rack Positions per Section
- 208 or 240 Volt, 60 Hz, 1 or 3 Phase
- Computer Controls with Digital Time & Temperature Readout. Includes Cook & Hold Cycle, Shelf ID, and 24 hr. Timer with Audible Alarm (D Models Only)

OPTIONS

- ❑ Stainless Steel Legs
- ❑ Casters
- ❑ 480 Volt, 60 Hz, 3 Phase

MODELS

- ❑ HEC501 – Single Deck Electric Convection Oven
- ❑ HEC501D – Single Deck Computer Control Electric Convection Oven
- ❑ HEC502 – Double Deck Electric Convection Oven
- ❑ HEC502D – Double Deck Computer Control Electric Convection Oven
- ❑ HEC504 – Single Deck Electric Convection Oven with Open Stand
- ❑ HEC504D – Single Deck Computer Control Electric Convection Oven with Open Stand

ACCESSORIES

- ❑ Extra Oven Rack(s)
- ❑ Stainless Steel Drip Pan
- ❑ Down Draft Flue Diverter for Direct Vent Connection
- ❑ Stacking Kit (HEC501 and HEC501D only)

Specifications, Details and Dimensions on Inside and Back.

HOBART

HEC5 SERIES ELECTRIC CONVECTION OVENS

HEC5 SERIES ELECTRIC CONVECTION OVENS

HOBART
701 S Ridge Avenue, Troy, OH 45374
1-888-4HOBART • www.hobartcorp.com

IMPORTANT

1. An adequate ventilation system is required for commercial cooking equipment. Information may be obtained by writing to the National Fire Protection Association, Batterymarch Park, Quincy, MA 02289. When writing, refer to NFPA No. 96.
2. This appliance is manufactured for commercial installation only and is not intended for home use.

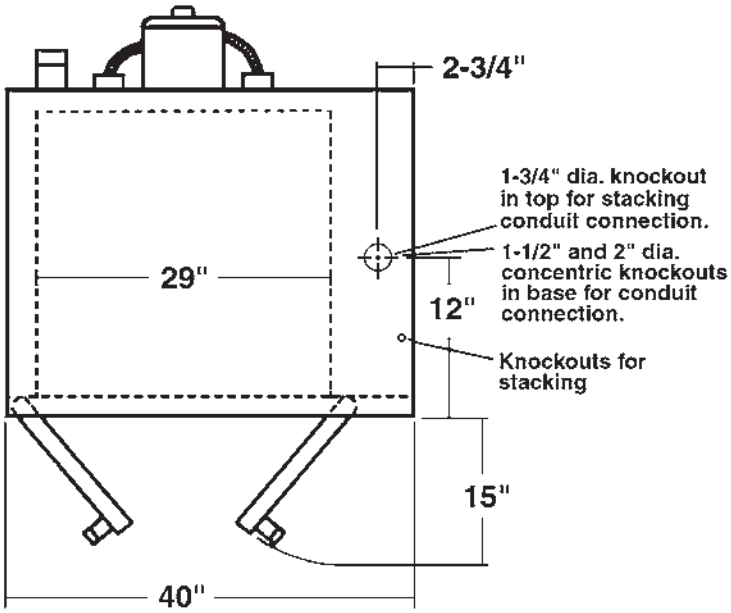

MODEL NO.	WIDTH	DEPTH (INCLUDES HANDLES)	HEIGHT	KW PER OVEN	TOTAL KW	ELECTRICAL	APPROX. SHP. WT. LBS.
HEC501 HEC501D	40"	41½"	56¾"	12.5	12.5	208 or 240/60/1 or 3	472
HEC502 HEC502D	40"	41½"	70"	12.5	25	208 or 240/60/1 or 3	1,180

MODEL NO.	TOTAL CONN. KW	3 PHASE LOAD KW PER PHASE			NOMINAL AMPS PER LINE WIRE										
					3 PHASE									1 PHASE	
					208 VOLT			240 VOLT			480 VOLT				
		X-Y	Y-Z	X-Z	X	Y	Z	X	Y	Z	X	Y	Z	208V	240V
HEC501 HEC501D	12.5	4	4	4.5	35	33	35	33	29	33	14.4	15.3	15.3	60	52
HEC502 HEC502D	25	8	8	9	70	66	70	66	58	66	28.8	30.6	30.6	120	104

HOBART
701 S Ridge Avenue, Troy, OH 45374
1-888-4HOBART • www.hobartcorp.com

HEC5 SERIES ELECTRIC CONVECTION OVENS

DETAILS AND DIMENSIONS

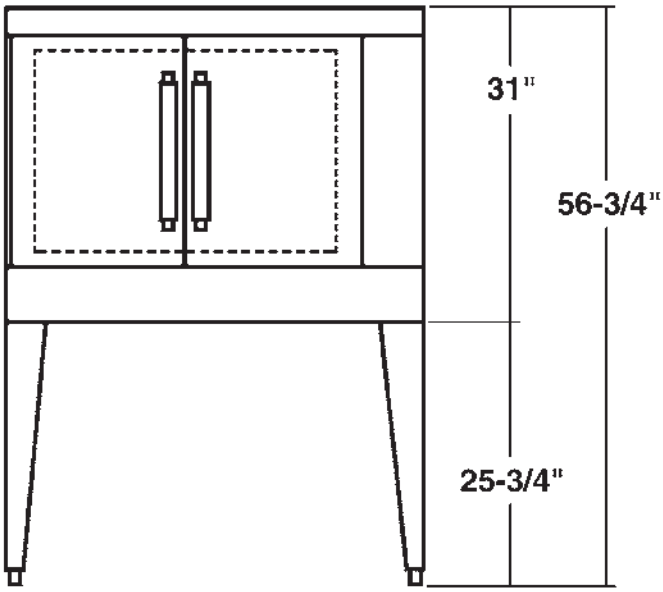

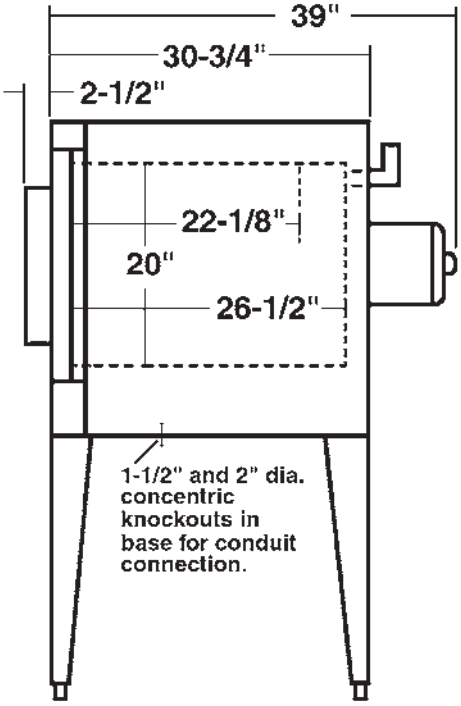

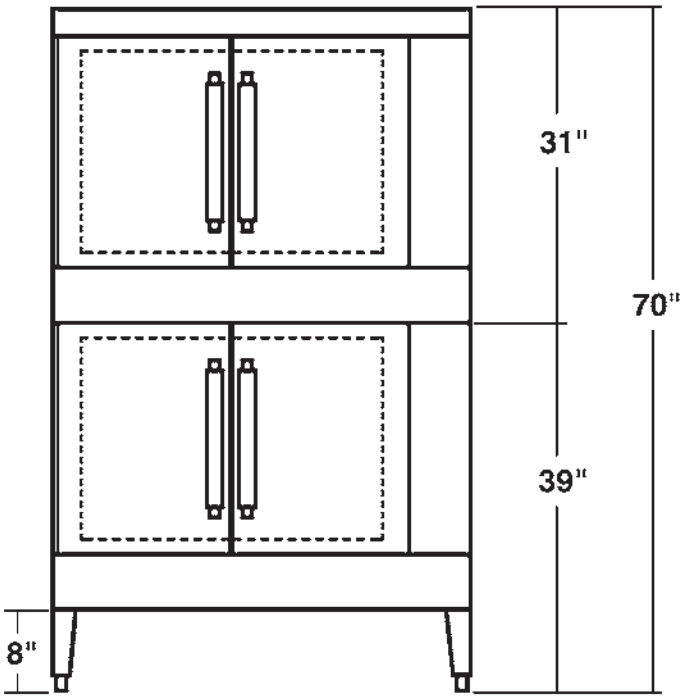

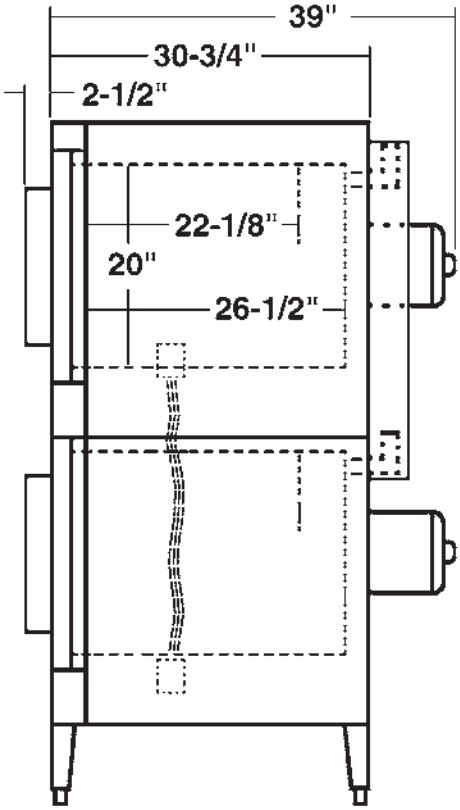

HEC5 SERIES ELECTRIC CONVECTION OVENS

HOBART
701 S Ridge Avenue, Troy, OH 45374
1-888-4HOBART • www.hobartcorp.com

SPECIFICATIONS

General: Electric convection oven. Basic section **(HEC5/HEC5D)** is without legs; may be ordered separately for replacement, for stacking 2-high or for mounting on legs. **HEC501/HEC501D** single basic section on 25¾" legs. **HEC502/HEC502D** two basic HEC5/HEC5D sections on 8" legs.

Construction: Stainless steel front, sides, top and back, painted legs. Porcelain enamel on steel oven interior. Simultaneously operated stainles2s steel doors with windows. Two interior oven lights per section. Non-sag insulation applied to the top, rear, sides, bottom and doors.

Oven interior measures 29"w x 22⅛"d x 20"h. Five nickel plated oven racks per section measure 28¼" x 20½". Eleven position nickel plated rack guides with positive rack stops per section.

Controls: Side mounted, solid-state temperature controls adjust from 150° to 500°F. 60-minute timer with audible alarm. Oven cool switch for rapid cool down.

"D" models feature side-mounted computer controls adjustable from 150° to 500°F, 24-hour timer with audible alarm, six programmable preset buttons, Cook & Hold and Shelf ID.

Electrical: One ½ H.P. two-speed oven blower-motor per section. Rated power input is 12.5 KW per section. 208 or 240 volts, 60 Hz, 1 or 3 phase.

IMPORTANT

WHEN ORDERING: The following must be specified:

1) Required voltage

As continued product improvement is a policy of Hobart, specifications are subject to change without notice.

LITHO IN U.S.A. (H-01) Printed On Recycled Paper