Item No. _____

Model Number: 3015

Description

X15R FLOSS MACHINE W/PAN

The X15 uses the double deck 51/2" band – two ribbons just about double the production of the Econo Floss or the Floss Boss.

The X15 is the easiest cotton candy machine to operate – fill the spinner head, turn both switches on and by turning the heat control knob you adjust the voltage so that the needle on the voltmeter points to the “green” area. Note that all Whirlwind, Tornado, Econo Floss and Mega Floss machines include the Whirl Grip Floss Stabilizer. (Only the Floss Boss requires this to be purchased extra).

Gold Medal Products Co.

10700 Medallion Drive
Cincinnati, Ohio 45241-4807
E-Mail goldme19@eos.net
Web Site gmpopcorn.com

Phone: (513) 769-7676
(800) 543-0862
Fax: (513) 769-8500
Toll Free Fax (800) 542-1496

Model Number: 3015

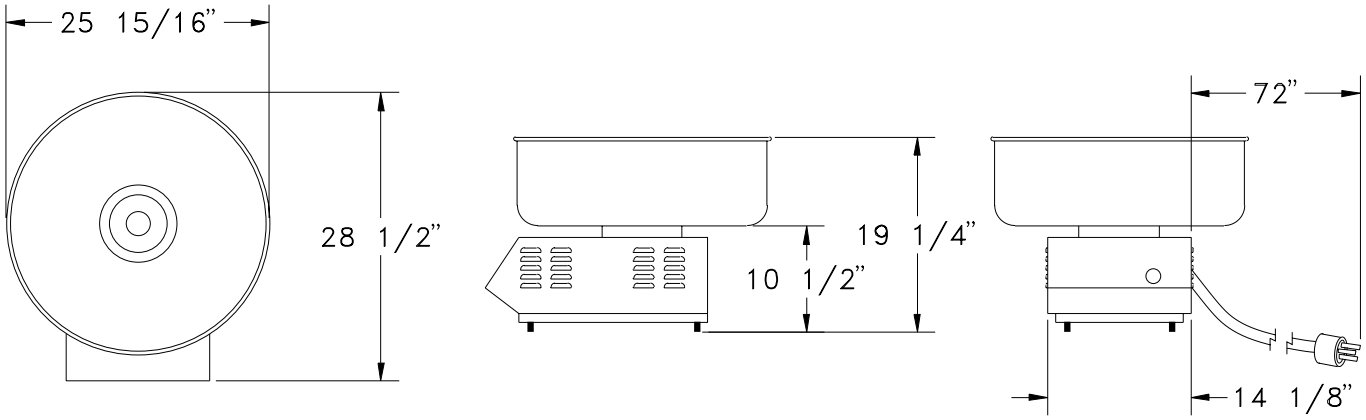

Width:	26.00	Pkg Width:	16.00
Length:	26.00	Pkg Length:	24.00
Height:	18.00	Pkg Height:	19.00
Weight:	71	Pkg Weight:	81.00
		CU/FT:	4.22

Voltage:	120	Hertz:	60
AMPS:	24	Receptacle:	5-30R
Wattage:	2880	Plug Type:	5-30P

Model Variations

Gold Medal Products Co.

10700 Medallion Drive
Cincinnati, Ohio 45241-4807
E-Mail goldme19@eos.net
Web Site gmpopcorn.com

Phone: (513) 769-7676
(800) 543-0862
Fax: (513) 769-8500
Toll Free Fax (800) 542-1496