Item No. _____

Model Number: 2488

Description

SUPER 88 P/C MACHINE

A compact 8 ounce “little brother” to the 2489. 18 x 16” footprint. 4” extra height gives more working room than any six ounce machine.

Gold Medal Products Co.

10700 Medallion Drive
Cincinnati, Ohio 45241-4807
E-Mail goldme19@eos.net
Web Site gmpopcorn.com

Phone: (513) 769-7676
(800) 543-0862
Fax: (513) 769-8500
Toll Free Fax (800) 542-1496

Model Number: 2488

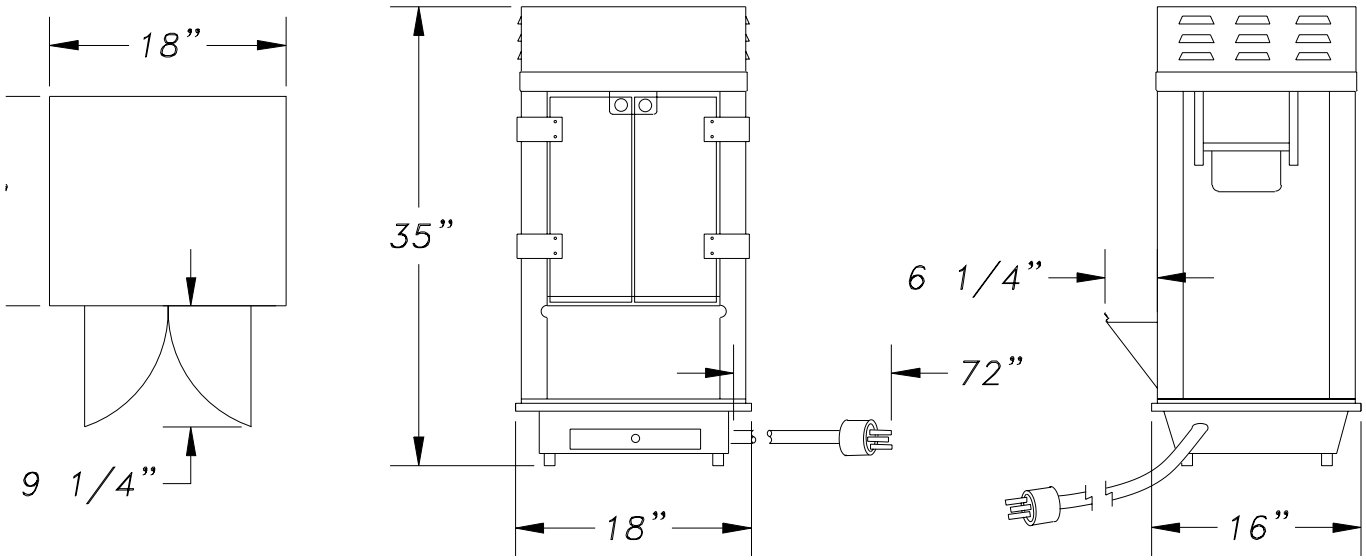

Width:	18.00	Pkg Width:	18.00
Length:	16.00	Pkg Length:	20.00
Height:	35.00	Pkg Height:	38.00
Weight:	63	Pkg Weight:	69.00
		CU/FT:	7.92

Voltage:	120	Hertz:	60
AMPS:	10.4	Receptacle:	5-15R
Wattage:	1550	Plug Type:	5-15P

Model Variations

Gold Medal Products Co.

10700 Medallion Drive
Cincinnati, Ohio 45241-4807
E-Mail goldme19@eos.net
Web Site gmpopcorn.com

Phone: (513) 769-7676
(800) 543-0862
Fax: (513) 769-8500
Toll Free Fax (800) 542-1496