Project _____ Item # _____ Quantity _____

SP5
5 Quart Power Mixer

Model

❑ SP5 - 5 Quart Power Mixer

Color-White with gray top ❍

Standard Features

- Ten speeds
- Electronic speed and load control
- Durable, NSF Approved, white powder coating
- Rigid cast aluminum body
- Polycarbonate splash cover with ingredient chute
- All stainless steel attachments
- Dual bowl clamps to lock bowl down
- Heavy duty motor, 800 watts
- Gear-driven, high torque transmission and motor
- Permanently lubricated transmission
- Thermal overload protection
- Attachment hub
- Easy action bowl lift
- Six foot cord with plug

Standard Accessories

- 5 quart polished stainless steel bowl
- Stainless steel flat beater
- Stainless steel wire whip
- Stainless steel spiral dough hook
- Polycarbonate splash cover

Standard Warranty

- Two-years parts and one-year labor

Built into each mixer is the quality of workmanship and design synonymous with Globe.

Approved By:_____

Date:_____

precisely.

GLOBE FOOD EQUIPMENT COMPANY

www.globeslicers.com

2153 Dryden Rd.
Dayton, OH 45439
Phone: 937-299-5493
Phone: 800-347-5423
Fax: 937-299-4147

5 Quart Power Mixer SP5

Specifications

Motor: Universal motor, 800 watts, grease packed ball bearing, air cooled, 115/60/1, 4 amps. Electrically controlled thermal overload protection (manual reset).

Finish: NSF approved white powder coating.

Capacity: 5 quart (5 liter) bowl.

Transmission: Heavy duty transmission with precision milled gears that operate the planetary action and provide high torque mixing power. The gears are packed in a long lasting grease, and all shafts are mounted in ball bearings.

Cord and Plug: 6 ft. flexible three wire cord with ground plug.

Standard Equipment: Standard equipment includes a 5 quart #304 series stainless steel bowl, stainless steel spiral dough hook, stainless steel wire whip, stainless steel flat beater and polycarbonate bowl guard. A sturdy hand lever on the body column raises and lowers the bowl as well as locking in place at the top and bottom positions.

Electronic Speed and Load Control: Guarantees consistent kneading and mixing performance.

Ten Speeds - Agitator Speeds (RPMs):

0	=	OFF
1	=	30 (stir)
2	=	50
3	=	70
4	=	90
5	=	105
6	=	120
7	=	145
8	=	165
9	=	180
10	=	200

Hub Attachment Speeds (RPMs):
50 to 450 RPMs

Dimensions:
Foot Print = 13.1” x 15.3”
(33.4cm x 38.9cm)
Overall Length = 15.3” (38.9cm)
Overall Width = 13.1” (33.4cm)
Overall Height = 17.1” (43.3cm)

Shipping Information:
Freight Class: 85
Net Weight: 33 lbs (15 kg)
Shipping Weight: 40 lbs (18 kg)
Shipping Dimensions:
15”W x 18.5”D x 20.5”H
(37cm x 46cm x 52cm)
Cartons are reinforced for shipping. The weight and dimensions of this reinforced carton are included above and may vary from shipment to shipment.

Optional Accessories:

XTABLE Mixer Table with undershelf (Stainless steel top with galvanized steel undershelf and legs.)
30”W x 24”D x 24”H
(76.2cm x 61cm x 61cm)

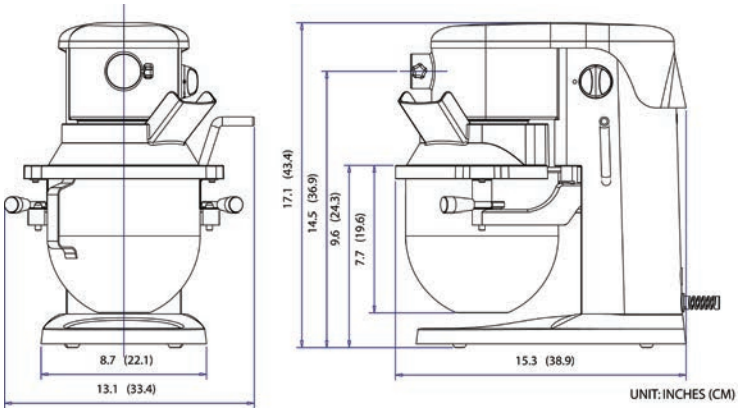

GLOBE FOOD EQUIPMENT COMPANY

www.globeslicers.com

2153 Dryden Rd.
Dayton, OH 45439
Phone: 937-299-5493
Phone: 800-347-5423
Fax: 937-299-4147

Printed in U.S.A. 10-2009

Specifications are subject to change without notice.