Project Name:_____ AIA#:_____ Model #:_____

Location:_____ SIS#:_____ Item #:_____ Quantity:____

40 Quart Floor Mixer

Built into each mixer is the quality of workmanship and design synonymous with Globe.

Model

r SP40 - 40 Quart Planetary Mixer

Intertek

Standard Features

- Powerful custom built 2 HP motor
- Three fixed speeds
- Gear-driven, high torque transmission
- Heat-treated hardened steel alloy gears and shafts
- Permanently lubricated transmission
- Thermal overload protection
- Front-mounted digital controls with 60 minute timer and last batch recall
- Rigid cast iron body
- NSF approved enamel gray paint
- Industry standard #12 attachment hub
- Safety interlocked bowl guard and bowl lift
- Non-slip rubber feet
- 6 foot cord and ground plug

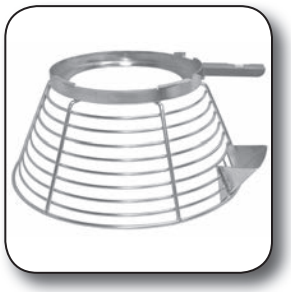

- High-quality stainless steel removable bowl guard with built-in ingredient chute
- Interlocking guard is easy to attach and remove for cleaning
- Dish machine safe

Standard Accessories:

- 40 quart stainless steel bowl
- Flat beater (aluminum)
- Stainless steel wire whip
- Spiral dough hook (aluminum)

Warranty

- Two-year parts and one-year labor

Optional:

r Slicer/shredder/grater for #12 hub

r Meat grinder for #12 hub

r Flat beater (stainless steel)

r 20 Qt adapter kit

r Extended Warranty

(More options on back)

GLOBE FOOD EQUIPMENT COMPANY
2153 Dryden Rd., Dayton, OH 45439
Phone: 937-299-5493 Fax: 937-299-4147
800-347-5423
www.globeslicers.com

Approved By: _____

Date: _____

GLOBE FOOD EQUIPMENT COMPANY

40 Quart Floor Mixer

SP40

40 Quart Floor Mixer

SP40

SP40

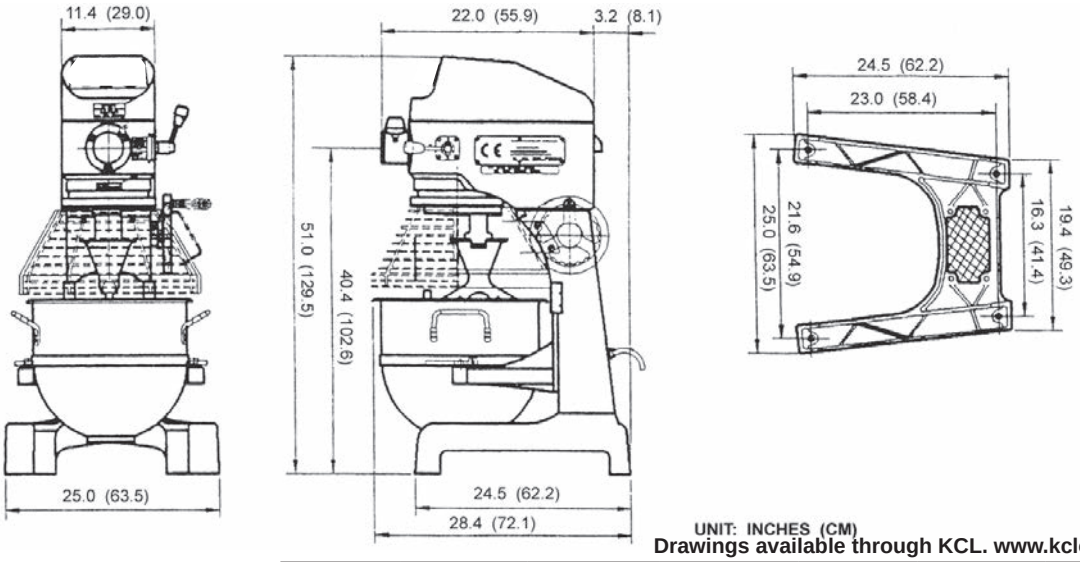

UNIT: INCHES (CM)

Drawings available through KCL. www.kclcad.com

Model	Elevation	Right	Plan	Back	BIM 3D	Revit
SP40						

SPECIFICATIONS

Model	Motor	Volts	Amps	Transmission Type	Capacity	Controls	Agitator Speeds (RPMs) 1st	2nd	3rd	Attachment Speeds (RPMs) 1st	2nd	3rd
***SP40**	2 HP	220/60/1 208/60/3	12 7	Gear	42 qt / 40 L	Front-mounted digital controls & timer	74	132	272	52	92	190

Cord & Plug: Attached 6 foot flexible 3-wire cord with molded plug fits a grounded receptacle. Single phase NEMA L6-30P Three phase NEMA L15-20P

STANDARD ACCESSORIES:

- 40 Quart #304 series stainless steel bowl
- Aluminum spiral dough hook and flat beater
- Stainless steel wire whip and bowl guard with built-in ingredient chute

OPTIONAL ATTACHMENTS & ACCESSORIES:

- **XXBOWL-40** Stainless steel bowl
- **XXBEAT-40** Alum. flat beater
- **XXBEAT-40SS** S/S flat beater
- **XXHOOK-40** Alum. dough hook
- **XXWHIP-40** S/S wire whip
- **XXHDWHIP40-4** Heavy-duty 4 mm S/S wire whip
- **XXHDWHIP40-5** Heavy-duty 5 mm S/S wire whip
- **XXSCRP-40** scraper with mounting kit
- **XXACC20-40** Adapter kit - 20 qt bowl, hook, beater and whip
- **XBTRUCK-40** Heavy duty bowl truck

Chopper Plate Sizes Available:

CP02-12	1/16"	(2 mm)
CP04-12	5/32"	(4 mm)
CP05-12	3/16"	(5 mm)
CP06-12	1/4"	(6 mm)
CP08-12	5/16"	(8 mm)
CP10-12	3/8"	(10 mm)
CP12-12	1/2"	(12 mm)
CP14-12	9/16"	(14 mm)
CP16-12	5/8"	(16 mm)
CP18-12	11/16"	(18 mm)
CP00-12	Stuffing Plate	

- **XST12** 1/2" stuffing tube (sheep)
- **XST34** 3/4" stuffing tube (hog)
- **XMCA-SS** Meat Grinder Assembly (Polished stainless steel cylinder, worm gear, ring, and s/s pan. Includes knife, 3/16" plate, and pusher.)
- **XXCK** Chopper knife for the XMCA-SS
- **XASP** Adjustable slicing plate (for vegetables only)
- **XVSGH** 9" Slicer/Shredder/ Grater Housing Only (no plates included-must select from plates listed below)
- **XPH** Plate holder -*only 1 required

Shredding Plates:

XSP332*	3/32"	(2.3 mm)
XSP316*	3/16"	(4.7 mm)
XSP14*	1/4"	(6.3 mm)
XSP516*	5/16"	(7.9 mm)
XSP12*	1/2"	(12.7 mm)
XGP*	Grating plate	

FACTORY INSTALLED OPTION:

- **XXCORR-40** Correctional package includes tamper resistant external fasteners.

EXTENDED WARRANTY

- **SP-XD4060** Extended warranty for the SP40 mixer. Coverage extends factory warranty to 2-years. Only available at time of purchase.

Specify voltage when ordering

DIMENSIONS & SHIPPING INFORMATION

Freight Class 85

Cartons are reinforced for shipping. The weight and dimensions of this reinforced carton are included below and may vary from shipment to shipment. ***This product ships on a pallet.***

Model	Foot Print	Overall Dimensions	Net Weight	Shipping Dimensions	Shipping Weight
SP40	24.5" D x 25" W (62 cm x 63.5 cm)	28.4" L x 25" W x 51" H (72 cm x 63.5 cm x 129.5 cm)	550 lbs. (250 kg)	48" L x 46" W x 65" H (122 cm x 122 cm x 165 cm)	750 lbs. (339 kg)

GLOBE FOOD EQUIPMENT COMPANY

www.globeslicers.com

2153 Dryden Rd.
Dayton, OH 45439
Phone: 937-299-5493
Phone: 800-347-5423
Fax: 937-299-4147

Printed in U.S.A. 06-2013

Ver. 1. 032012 Rev. 3 GFE 080713

Specifications are subject to change without notice.