Cleveland

BRAISING PANS /
TILTING SKILLETS

Project _____
Item _____
Quantity _____
FCSI Section _____
Approval _____
Date _____

DuraPan™ SERIES

GAS, OPEN OR MODULAR BASE,
30 & 40 GALLON (115 & 150 LITER)

MODELS: ☐ SGL-30-TR ☐ SGM-30-TR ☐ SGL-40-TR ☐ SGM-40-TR

Cleveland Standard Features

- Leg or Modular Base
- Full 30/40 Gallon (115/150 Liters) Capacity Rating to Bottom of Pouring Lip
- Power Tilt (Hydraulic Hand Tilt Optional)
- Stainless Steel Clad 5/8" Cooking Surface Guaranteed against warping
- Stainless Steel Coved Cornered Pans with both Gallon and Liter Markings
- All Stainless Steel Construction for durability and easy cleaning
- Adjustable, Electronic Thermostat controls temperature from 100°F to 425°F
- High Efficiency Heating System with even heat distribution
- Electronic Spark Ignition (ESS)
- Fast Heat-Up and Recovery Time-Preheats in 11 minutes, full capacity from cold to boiling in 60 minutes
- Spring Assist Cover with Adjustable Vent and Full Width Handle
- On/Off Switch, Thermostat Knob and Pilots, recessed to avoid breakage
- Four Stainless Steel, Level adjustable feet, rear flanged for bolting
- All Controls are serviceable from the front of the unit
- Two pilot lights; Green = Power on, Amber = Temperature Cycling
- Splash Proof Controls and Water Tight Electrical Connections
- High Limit Safety Device set at 475°F (246°C)
- Anti-Splash Pouring Lip
- Supplied with Cord & Plug for 115-volt controls
- Typical approvals include AGA, CSA, CE and NSF

Options & Accessories

- ❒ Sliding Drain Drawer with Splash Screen (SLD) (for SGL models only
- ❒ Hydraulic Hand Tilt with quick lowering feature (HTS)
- ❒ Power Tilt with Hand Tilt Override (PT1)
- ❒ Double or Single Pantry Faucet (SPS14, DPS14), includes Faucet Mounting Bracket
- ❒ Double or Single Pantry Skillet Filler with 60" hose (SKF-S or DKF-S)

Open base model shown with optional Drain Drawer (SLD) and Power Tilt (PT1)

Short Form Specifications

Shall be CLEVELAND, Tilting Skillet; Model SG ____ - ____ - TR gas (TYPE ___) - holding no less than ____ gallons (____ liters); complete with Thermostatic Safety and Gas Controls; Gallon Markings; Stainless Steel Clad 5/8" Cooking Surface; Power Tilt; Spring Assist Cover with adjustable Vent. All Stainless Steel Construction.

- ❒ Hot & Cold Water Pre-Rinse Spray Head with Hose (PRS-S)
- ❒ Gas types other than natural
- ❒ Voltage Option:
  - VOSK4, 220/240 Volt, 50 Hz, 1 Phase - for export
- ❒ Food Strainers for pouring spout (FS)
- ❒ Vegetable Steamers (VS)
- ❒ Poaching Pans (PP)
- ❒ Wall Mounting (WMS)
- ❒ In-Wall Carrier (IWCS)
- ❒ Pan Carriers (PCS), not available on 30 gallon models with a Tangent Draw-Off Valve
- ❒ 2" Tangent Draw-Off Valve (TD2), left side only

1333 East 179 St.,
Cleveland, Ohio, U.S.A. 44110
Tel: 1-216-481-4900
Fax: 1-216-481-3782
Web Site: www.ClevelandRange.com
Email: Steam@ClevelandRange.com

Manitowoc

DIMENSIONS

MODEL	A	B	C	D	E
SGL-30-TR	36"	32"	9"	5"	20"
	(915mm)	(812mm)	(229mm)	(127mm)	(508mm)
SGL-40-TR	48"	44"	12 1/8"	8"	22"
	(1220mm)	(1118mm)	(308mm)	(203mm)	(559mm)

CAPACITIES

In 4 oz. servings. Other sizes may be calculated.
30 gallons / 115 Liters 960
40 gallons / 150 Liters 1280

SPECIFICATIONS

ELECTRICAL SUPPLY (6' CORD & PLUG)			GAS SUPPLY (PIPING 3/4" NPT)	CLEARANCE	APPROX. SHIPPING WEIGHTS
VOLTS:	120	220/240	**TYPE**: NAT or LP	**MIN. TO COMBUSTABLE SURFACES**: SIDES: 0, REAR: 6" (153mm)	***SGL-30-TR*** 440 LBS. 200 KG.
PHASE:	1	1	**WATER COLUMN**: 4.5 (NAT), 10.5 (LP)	**MIN. TO NON COMBUSTABLE SURFACES**: SIDES & REAR: 0	***SGL-40-TR*** 520 LBS. 237 KG
AMPS:	1.8	.83	**BTU PER CU. FT**.: 1000 (NAT), 2500 (LP)	**NOTE**: 4 1/2" (115mm) required on right hand side for faucet	
FREQ:	60 HZ	50 HZ	**SUPPLY PRESSURE**: 5" W.C. MIN (NAT), 11" W.C. MIN (LP)		
			BTU RATINGS: ***SGL-30-TR:*** 91,000 per hour ***SGL-40-TR:*** 130,000 per hour		

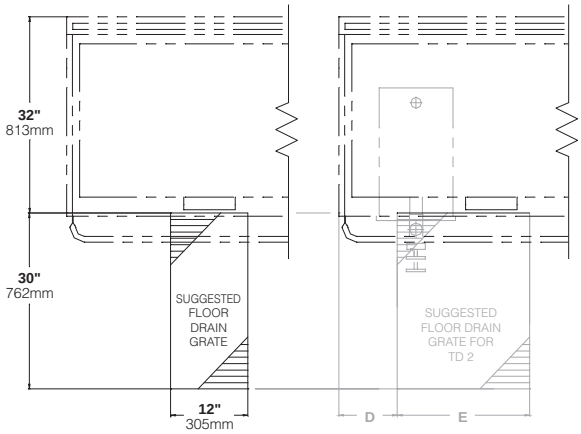

EXTERIOR HINGES (REQUIRED FOR OPTIONAL TD 2)

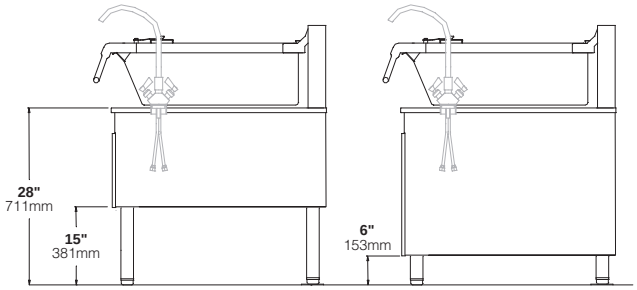

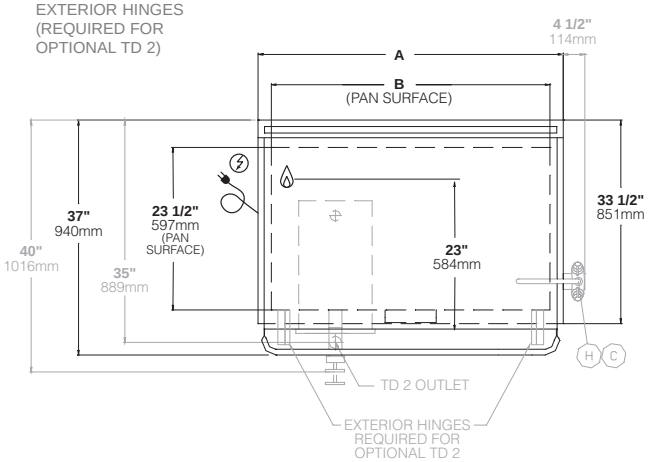

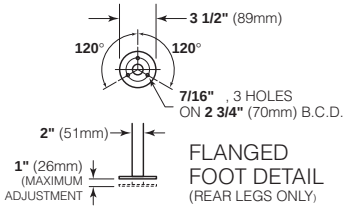

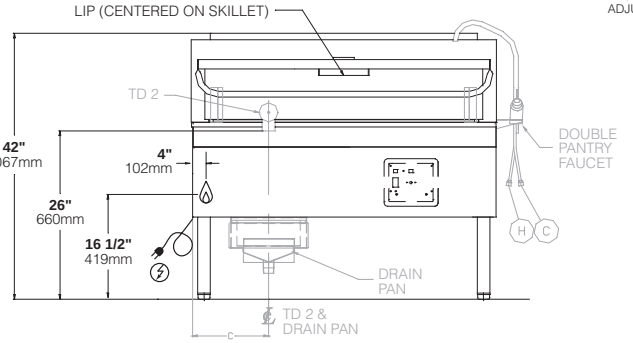

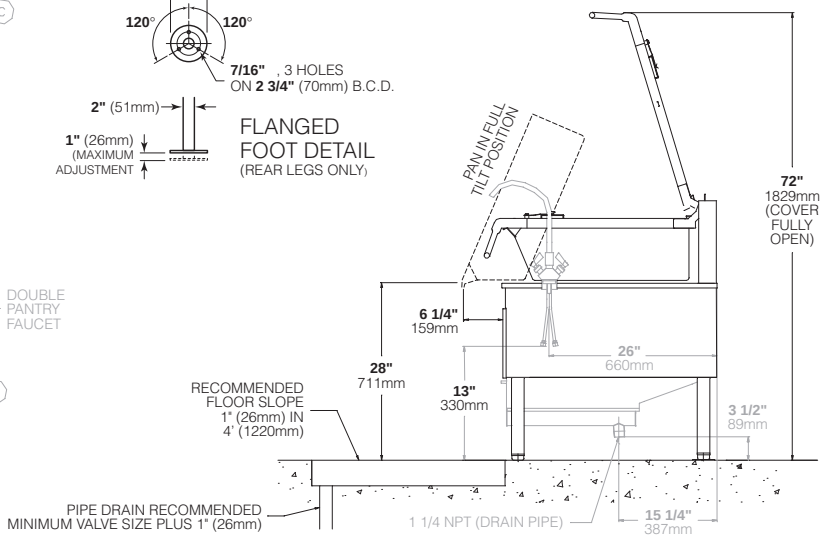

NOTE: NON STANDARD ITEMS ARE SHOWN IN GRAY

NOTES:
Cleveland Range reserves right of design improvement or modification, as warranted.
Many regional, state and local codes exist and it is the responsibility of the owner and installer to comply with the codes.
Cleveland Range equipment is built to comply with applicable standards for manufacturers. Included among those approval agencies are U.L., NSF, CGA, CSA, ETL and others.

(NOT TO SCALE)