Cleveland

STEAMCRAFT® GENERATOR STYLE HIGH SPEED CONVECTION STEAMERS

Project _____
Item _____
Quantity _____
FCSI Section _____
Approval _____
Date _____

SteamCraft® Ultra 3

COUNTER TYPE DESIGN
PRESSURELESS CONVECTION STEAMER
ELECTRIC STEAM GENERATOR, 8 KW

MODEL: ☐ *21-CET-8*

Cleveland Standard Features

- Cooking Capacity for up to three 12″ x 20″ x 2½″ deep Cafeteria Pans.
- **Innovative *PowerPak* Electric Steam Generator:** One Special Stainless Steel Fire Bar Heating Element. Strong 14 Gauge Stainless Steel Construction. Large 3.5 gallon generator reservoir for fast steam cooking production. Fully insulated rear mounted steam generator.
- **Easy Access Generator Cleaning Port:** Generator Cleaning Port located on the outside, top of the unit. Not necessary to remove hot panels or rack guides to access.
- **Instant Steam Stand By Mode:** Hold generator at a steaming temperature. Allows unit to start cooking instantly.
- **Durable 14 Gauge, Stainless Steel Construction:** For compartment door, cavity and steam generator.
- **One 60 Minute Electro-Mechanical Timer and Switch for manual operation:** Audible signal for cooking time completion.
- **Main Power On/Off Switch:** With Automatic Water Fill.
- **Exclusive Steam Cooking Distribution System:** Maintenance Free Exclusive Brass Steam Jets produce a high velocity convection steam without fans. Coved Corner design in cooking compartment distributes heat evenly, and is easy to keep clean. Creased top & bottom enhance drainage. Cold water condenser behind drain maintains a dry steam. Fully insulated cooking compartment for thermal efficiency. Removable Stainless Steel Slide Racks for easy cleaning.
- **Automatic Generator Drain:** Contains a "Water Jet" Spray Rinse Drain Cleaning Cycle to keep drain clear.
- **Exclusive Automatic Remote Probe Type Water Level Control:** Separate from the generator for easy access.
- **Exclusive "Cool to the Touch" Two-Piece Compartment Door Design:** Free floating inner door with reversible gasket provides an air tight seal. Stainless Steel Slam/Latch Door Latch mechanism for reliability.
- **Left Hand Door Hinging:** Compartment Doors hinged on the left, controls on the right.
- Available in most voltages, single or three phase only.
- Stackable by using the optional (STKI) Stacking Kit and Optional Stacking Stand (ES2130S) is available (2 units only).

Options & Accessories

- ❒ Right hand Door Hinging, Controls on the Left (DHR)
- ❒ Electronic Timer with Compensating Load Feature (ETC)
- ❒ ON/OFF Steam Switch for compartment controls (MC)

Short Form Specifications

Shall be CLEVELAND, **SteamCraft® Ultra 3***, one compartment, Counter-Type Steamer, Model 21-CET-8, ___volts, 8.5 KW, ___Hz. Heavy duty all Stainless Steel construction. Rear mounted, insulated Steam Generator with Remote Probe Type Water Level Controls and Automatic Steam Generator Blowdown with "Water Jet" Drain Cleaning feature.*

- ❒ 34" (864mm) High Stainless Steel Economy Stand, for one 21-CET-8 (UniStand34)
- ❒ 24" (610mm) High Stainless Steel Stacking Stand (UniStand25), for mounting two stacked 21-CET-8, includes 2" Stainless Steel Mounting Spacer
- ❒ POSK Pull-Out Shelf Kit for UniStands (P/N 111724)
- ❒ URK Pan Rack Kit UniStands (P/N 111726)
- ❒ Equipment Stacking Stand Shelf Type (ES2446)
- ❒ Stacking Kit (P/N 107166) includes plumbing for water, a drain and Generator Cleaning Port Connections (STKI) (2 units only)
- ❒ 4″ Stainless Steel Legs (LF4)
- ❒ *Dissolve*® Descale Solution, 6 one gallon container w/quart markings (106174)
- ❒ Compartment Door Steam Shut Off Switch (SCS)
- ❒ Additional Pan Racks for Equipment Stands (PR)
- ❒ Cafeteria Pans in depths of 1″, 2½″ and 4″
- ❒ Water Filters

1333 East 179 St.,
Cleveland, Ohio, U.S.A. 44110
Tel: 1-216-481-4900
Fax: 1-216-481-3782
Web Site: www.ClevelandRange.com
Email: Steam@ClevelandRange.com

Manitowoc

Compartment has capacity for:
- Three, 12″ x 20″ x 2½″ deep Cafeteria Pans.

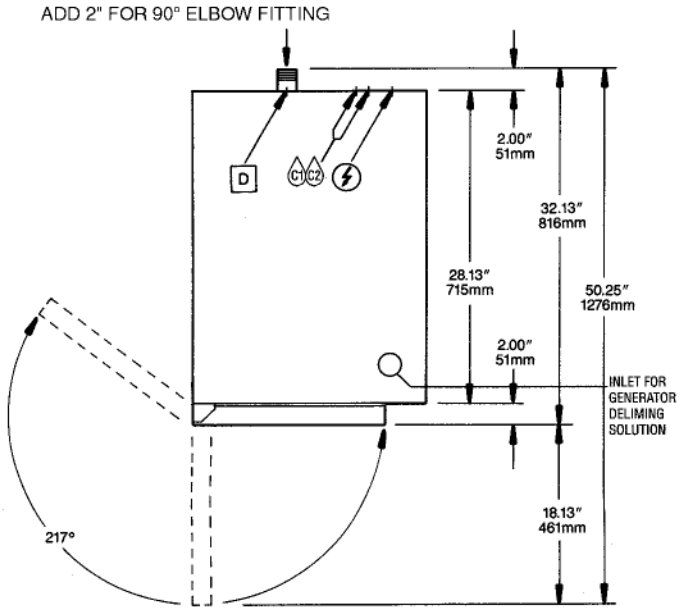

TOP VIEW

WATER QUALITY REQUIREMENT

The recommended minimum water quality standards whether untreated or pre-treated, based upon 10 hours of use per day, and a Daily Blowdown, are as follows:

TOTAL DISSOLVED SOLIDS	less than 60 parts per million
TOTAL ALKALINITY	less than 20 parts per million
SILICA	less than 13 parts per million
pH FACTOR	greater than 7.5
CHLORINE	less than 30 parts per million

Consult a local water treatment specialist for an on site water analysis for recommendations concerning steam generator feed water treatment (if required), in order to remove or reduce harmful concentrations of minerals. The use of highly mineralized water will mean that more frequent servicing of the steam generator will be necessary. The fact that a water supply is potable is not proof that it will be suitable for the generator.

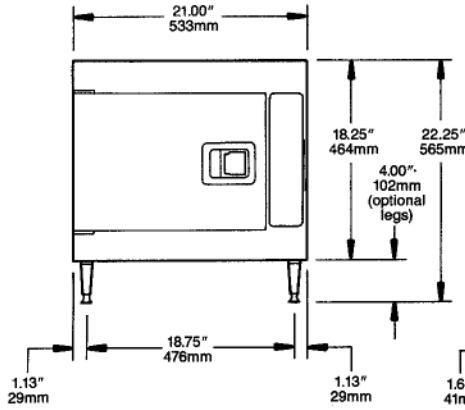

FRONT VIEW

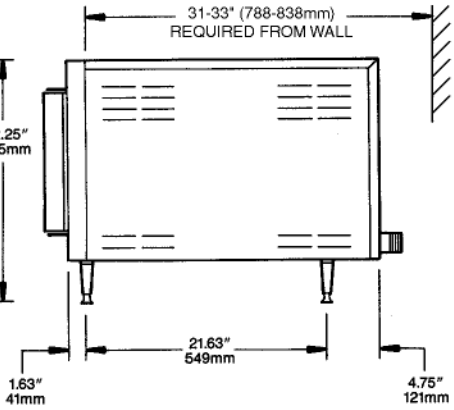

RIGHT SIDE VIEW

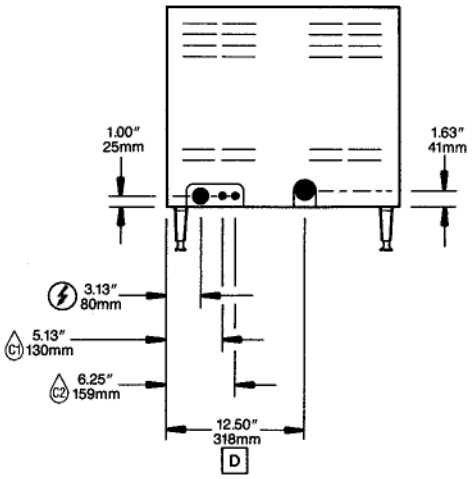

REAR VIEW

Two 3/4" NH-F (Garden Thread) Connections. Use NSF approved hose.

ELECTRIC				3 Ph			
				Volts	Watts	Amps	Wire
				208	8,300	23.6	3
				220	6,974	18.8	3
				240	8,300	20.5	3
1 Ph				440	6,974	9.4	3
Volts	Watts	Amps	Wire	480	8,300	10.3	3
208	8,300	39.9	2	360	7,445	12.3	4
220	6,974	31.7	2	380	8,300	13.0	4
240	8,300	34.6	2	415	8,300	11.9	4

WATER C	DRAINAGE D	CLEARANCE
Cold water: 35 psi min., 60 psi max. Two 3/4" NH-F (Garden Thread) Connections. Use NSF approved hose. C1 one for Condenser C2 one for Steam Generator	1¼″ N.P.T. tube Do not connect other units to this drain. Drain line must be vented. No PVC pipe for drain.	Right - 3", Left - 3", Rear - 3" (12" on control side if adjoining wall or equipment is over 30" high for service access) **Contact factory for variances to clearances.**

NOTES:
Cleveland Range reserves right of design improvement or modification, as warranted.
Many regional, state and local codes exist and it is the responsibility of the owner and installer to comply with the codes.
Cleveland Range equipment is built to comply with applicable standards for manufacturers. Included among those approval agencies are UL, ULC, UL/NSF#4, CE and CSA.

(NOT TO SCALE)

0612
Litho in U.S.A.