Item No. _____
Quantity _____

BEVERAGE-AIR

3779 Champion Blvd., Winston-Salem, NC 27105
1-888-845-9800 Fax# 1-336-245-6453
http://www.Beverage-Air.com

Commercial Refrigeration Equipment
General Specification

DEEP WELL HORIZONTAL COOLERS
DW FROSTY BREW SERIES

FROSTY BREW

MODELS:
DW49-B-29
DW64-B-29
DW79-B-29
DW94-B-29

3 Year Parts/Labor Warranty
Additional 2 Year Compressor Warranty

DW FROSTY BREW COOLERS
Deep Well horizontal Frosty Brew coolers include 4 (four) self-contained models in widths of 50”, 65”, 80” and 95”.

CABINET CONSTRUCTION
Exteriors of Deep Well models include attractive, wear-resistant vinyl on steel in black finish.

Bottle cap opener and cap catcher is standard with all models.

Tops include easy glide, stainless steel lids and stainless steel counter top with integral drinking glass stops. Lid locks are optionally available.

Standard interior metal is galvanized steel. Adjustable dividers included are epoxy coated steel wire.

Foamed-in-place CFC and HCFC-free polyurethane insulation enhances the structural strength of the cabinet and helps increase energy efficiency.

REFRIGERATION
Frosty Brew coolers let you serve better tasting—thirst quenching ice cold (30°F—32°F) beverages every time. Constructed with high cooling RPM fans which provide fastest cooling (pull down) and ice cold temperature of contained beverages for pure, thirst quenching enjoyment.

Balanced, forced-air, lift-out refrigeration system uses R134A refrigerant, which is CFC and HCFC-free for compliance with environmental safety concerns.

Coolers feature oversized self-defrosting evaporator with dual fans to move air and larger coil for greater cooling capacity.

ELECTRICAL
Units wired at factory and ready for connection to a 115/60/1 phase, 15 amp dedicated outlet. 8’ long cord and plug set included.

DW49-B-29

DW64-B-29

DW79-B-29

DW94-B-29

***Note**: Not all markings may apply to all model variations.

Available From:

Model Specified	_____	**Store#**	_____
Location	_____	**Quantity**	_____

BEVERAGE-AIR

Deep Well Horizontal Bottle Coolers

Models: DW49-B-29, DW64-B-29, DW79-B-29, DW94-B-29

MODEL	DW49-B-29	DW64-B-29	DW79-B-29	DW94-B-29
EXTERNAL DIMENSIONAL DATA				
Length Overall (inches) Length Overall (mm)	50” 1270	65” 1651	80” 2032	95” 2413
Depth Overall (inches) Depth Overall (mm)	26 1/2” 673	26 1/2” 673	26 1/2” 673	26 1/2” 673
Height Overall— (inches) Height Overall—(mm)	33 7/8” 860	33 7/8” 860	33 7/8” 860	33 7/8” 860
Number of lids	2	2	3	4
INTERNAL DIMENSIONAL DATA				
NET Capacity (cubic ft.) NET Capacity (Liters)	13.3 377	18.5 524	24.1 682	29.5 835
Internal Length Overall (inches) Internal Length Overall (mm)	46” 1168	61” 1549	76” 1930	91” 2311
Internal Depth Overall (inches) Internal Depth Overall (mm)	22 1/2” 572	22 1/2” 572	22 1/2” 572	22 1/2” 572
Internal Height Overall (inches) Internal Height Overall (mm)	27” 686	27” 686	27” 686	27” 686
Number of dividers	3	4	5	6
12 oz. bottle capacity	17 1/2 cases	25 1/4 cases	32 cases	39 cases
12 oz. can capacity	23 3/4 cases	34 3/4 cases	45 3/4 cases	55 3/4 cases
ELECTRICAL DATA				
Full Load Amperes 115/60/1	7.3	7.8	9.5	9.5
ENERGY CONSUMPTION (KWH)	3.7	5.27	3.77	4.73
REFRIGERATION DATA				
Horsepower	1/4	1/3	1/2	1/2
WEIGHT DATA				
Gross Weight (Crated lbs)	280	317	422	446
Gross Weight (Crated kg)	127	144	191	202

***Note**: Not all markings may apply to all model variations.

ELECTRICAL CONNECTION

Units pre-wired at factory and include 8’ long cord and plug set.

115/60/1
NEMA-5-15P

PLAN VIEWS

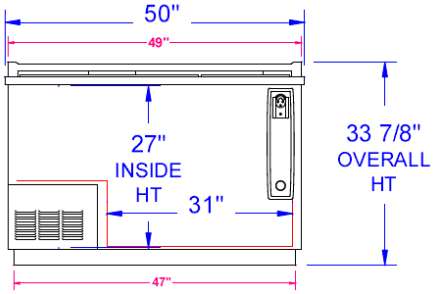

DW49 FRONT

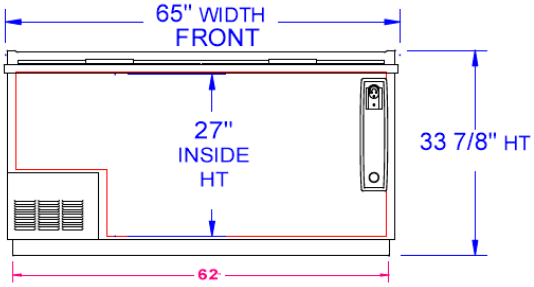

DW64 FRONT

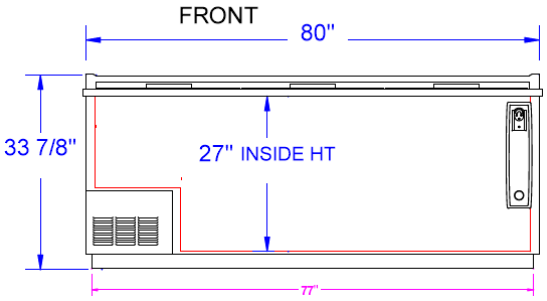

DW79 FRONT

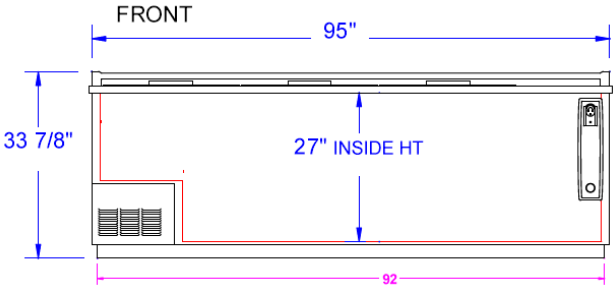

DW94 FRONT

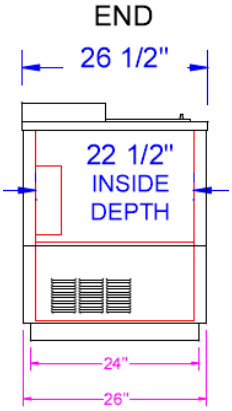

COMMON END

BEVERAGE-AIR® CORPORATION

3779 Champion Blvd. • Winston-Salem, NC 27105 USA • (336) 245-6400 • Fax (336) 245-6453 • (888) 845-9800 • www.beverage-air.com

Specifications are subject to change without prior notice. 06/13