"Super Hot Rod®" Flat Surface Roller Grill

Models: ☐ HR-45 ☐ HR-75 ☐ HR-85 ☐ HRS-45 ☐ HRS-75 ☐ HRS-85

PRODUCT: QUANTITY: ITEM#:

Designed Smart.

Equipment Package to fit your High Volume operation!

- The "Super Hot Rod" Roller Grills are designed for high volume.
- HR(S)-85 (18 rollers and 30-1/2" cooking surface across)
- HR(S)-75 (16 rollers and 30-1/2" cooking surface across)
- HR(S)-45 (16 rollers and 19-1/2" cooking surface across)
- HR(S)-85 can cook up to 1500 hot dogs per hour.
- Avaiable with "Tru-Turn" textured rollers for maximum roll-ability.
- New! HR-75 and HRS-75 120V with 2 Power cords now available.
- Units are designed to be used in a "clerk served" operation or in a customer "self service" merchandising plan. For counters between clerk and customer, some Roller Grills are available with "pass-through" sneeze guards.

Designed to deliver great tasting Hot Dogs

- Roller Grills heat quickly and have a fast recovery for unexpected surges in Hot Dog demand.
- Heating system has two cooking zones that can be turned to Grilling temperatures for cooking Hot Dogs in less than 4 minutes* and turned down to NSF safe holding temperatures for serving customers.

*Grill times based on Pre-heated roller grill (about 10 minutes warm up cycle).

Easy to Operate and Maintain

- "Easy to read" graphics and heavy duty knobs on the control panel make it easier for employees to operate at the correct temperatures.
- Infinite Control system gives operator the maximum ability to adjust temperatures to a variety of hot dogs, egg roll, or other roll type products.
- The "Super Hot Rod" Roller Grills are designed to require minimal labor:
  - New "Tru-Turn" coated Rollers just wipe clean with damp rag.
  - Raised rollers allow cleaning in "hard to reach" areas.
  - Removable grease collection pan is simple to wash clean.
- Easiest Roller Grill in the industry to service:
  - Unit is supplied with "easy to remove" side and bottom panels.
  - Two dependable, High Torque motors are the most reliable in the industry.
  - Warranty includes **On-Site repairs**, reducing the amount of potential down time.

Built Solid.

Built for Long Life!

- Exterior cabinet is constructed of stainless steel for maximum durability.
- Made with Heavy Duty wiring.
- "Tru-Turn" coating is 30% thicker than competitive non-stick coatings.
- Teflon seals at end of rollers stop grease from migrating into motors and chains.

Reliability Backed By APW Wyott's Warranty

- APW Wyott's Hot Rod Roller Equipment is backed by a 1 year limited warranty and a one year on-site labor warranty
- Certified by the following agencies:

MODEL HRS-85 ROLLER GRILL AND SNEEZE GUARD SG-85DD

MODEL HRS-85 ROLLER GRILL

Options:

- 6" Tongs
- Polycarbonate Sneeze Guards
- Pass through Sneeze Guards

See reverse side for product specifications.

APW Wyott Foodservice Equipment Company

729 Third Avenue • Dallas, TX 75226 • 800-527-2100 • 1-214-421-7366 • Fax 1-214-565-0976

For more information e-mail us at: Info@APWwyott.com

Rev. 1/1/2003

Ace Mart Restaurant Supply - Stores

"Super Hot Rod®" Flat Surface Roller Grill

Models: ☐ HR-45 ☐ HR-75 ☐ HR-85 ☐ HRS-45 ☐ HRS-75 ☐ HRS-85

PRODUCT: QUANTITY: ITEM#:

Flat Surface Roller Grill

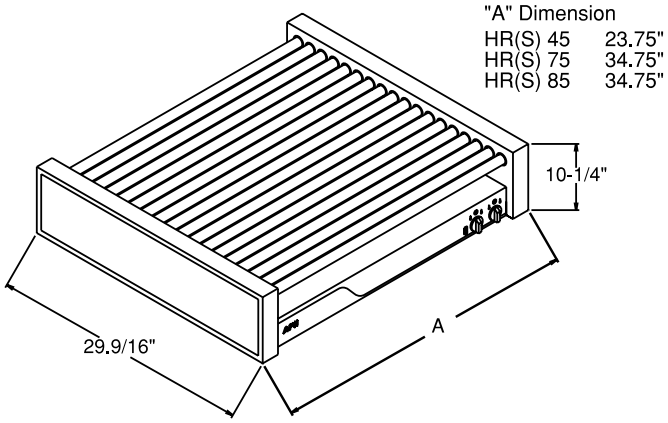

Polycarbonate Sneeze Guards (SG)

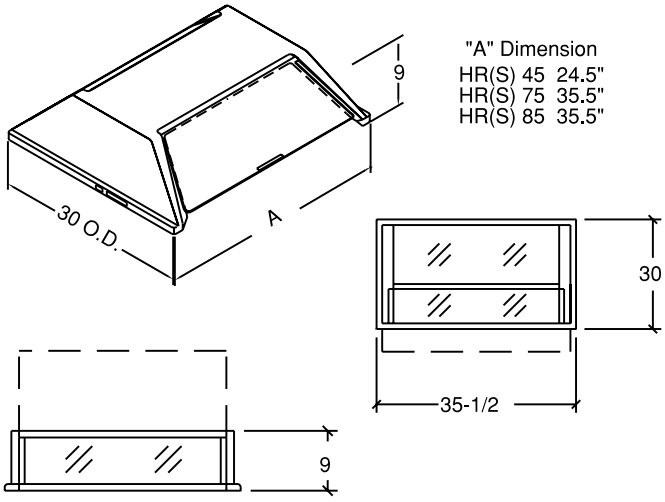

Pass Thru Sneeze Guards

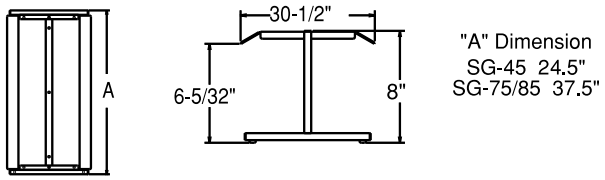

"Super Hot Rod®" Flat Surface Roller Grill & Sneeze Guards

PRODUCT SPECIFICATIONS

Construction:

Stainless steel exterior, aluminum drip pan and coated steel bottom. Available in chrome or "Tru-Turn" textured rollers. Two heavy-duty high torque motors.

Electrical Information:

120V units use a 5-15P Plug. Both the 208V and 240V units are provided with a 60" power cord with a Nema 6-15P plug that exits from the bottom on the left rear corner.

Electrical Specifications:

HR(S)-45:	120V, 1465W, 12.2 Amps 120V (Two power cords)
HR(S)-75:	208V, 1820W, 8.9 Amps 985W, 8.3 Amps, 60Hz, lphase 240V, 2410W, 10.1 Amps
HR(S)-85:	208V, 2017W, 9.7 Amps 240V, 2640W, 11.0 Amps

Overall Dimensions:

HR(S)-45:	8-1/2" H x 23-3/4" W x 29-9/16" D (21.6 cm x 60.3 cm x 75.1 cm) 16 Rollers
HR(S)-75:	8-1/2" H x 34-3/4" W x 29-9/16" D (21.6 cm x 88.3 cm x 75.1 cm) 16 Rollers
HR(S)-85:	8-1/2" H x 34-3/4" W x 29-9/16" D (21.6 cm x 88.3 cm x 75.1 cm) 18 Rollers

Ship Weight:

HR(S)-45:	70 lbs. (31.5 kg)
HR(S)-75:	87 lbs. (39.1 kg)
HR(S)-85:	89 lbs. (40 kg)

Sneeze Guard Specifications:

Overall Dimensions:

SG-45:	9" H x 24-1/2" W x 30-21/32" D (22.9 cm x 62.2 cm x 77.9 cm)
SG-45DD:	9" H x 24-1/2" W x 30-21/32" D (22.9 cm x 62.2 cm x 77.9 cm)
SG-45XP:	8" H x 24-1/2" W x 30-1/2" D (40.6 cm x 62.2 cm x 77.4 cm)
SG-75/85:	9" H x 35-1/2" W x 30-21/32" D (22.9 cm x 90.2 cm x 77.9 cm)
SG-75/85DD:	9" H x 35-1/2" W x 30-21/32" D (22.9 cm x 90.2 cm x 77.9 cm)
SG-75/85XP:	8" H x 37-1/2" W x 30-1/2" D (40.6 cm x 95.2 cm x 77.4 cm)

Ship Weight:

SG-45:	15lbs. (6.8kg)
SG-45DD:	15lbs. (6.8kg)
SG-45XP:	22lbs. (9.9kg)
SG-75/85:	18lbs. (8.1kg)
SG-75/85DD:	18lbs. (8.1kg)
SG-75/85XP:	25lbs. (11.3kg)

F·O·B/Cheyenne, WY

APW Wyott Foodservice Equipment Company

729 Third Avenue • Dallas, TX 75226 • 800-527-2100 •1-214-421-7366 • Fax 1-214-565-0976

For more information e-mail us at: Info@APWwyott.com

Rev. 1/1/2003 #1603

Ace Mart Restaurant Supply - Stores