# Anets GoldenFry™ 14” Standard Gas Fryer

# Model 14GS

Item No.

## This All Purpose Anets Fryer Has Special Features That Make It A Real Work Horse

The top quality stainless steel frypot provides remarkable recovery and years of service. Unique cross-fire burners provide a 4 sided heating system for highly efficient and consistent frying results. The easy to clean open frypot has sloped sides to prevent crumb accumulation. Food particles drop rapidly into the extra large cold zone which prolongs shortening life and reduces carbon build-up. Extra wide access to this cold zone permits reaching in and wiping out even the hardest to reach corners.

### STANDARD FEATURES

- Stainless steel frypot has a **10 year warranty**
- Open vat design with sloped sides forces food particles to fall into the easily accessible cold zone
- Unique cross fire burners provide a 4 sided heating system
- Fully insulated cabinet keeps the kitchen cool
- Dual (35 to 50lb.) shortening levels for varying cooking capacities
- Thermostat is located behind the door to protect from damage
- 1 1/4" Full port ball valve prevents clogging
- Stainless steel basket hanger lifts off for easy cleaning and access to the backsplash

ANETS GoldenFRY™

ANETS INC PO BOX 501, CONCORD, NH 03302-0501
509 ROUTE 3A, BOW, NH 03304 TEL: 603-225-6684, FAX:603-225-8497
L10-493 R1 www.anets.com
We reserve the right to change specifications without notice and without incurring any Obligation for equipment previously or subsequently sold.

# Anets GoldenFry™ 14” Standard Gas Fryer

# Model 14GS

ANETS GoldenFRY™

## SPECIFICATIONS

| | |
|---|---|
| Model | 14GS |
| Certification | ETL, NSF, CE* (*14GSU Model) |
| BTUH | 111,000 |
| Gas Pressure | NG 3.5" WC, LP 10" WC |
| Gas Connection | 3/4" NPT |
| Electrical Requirements | None |
| Thermostats | Millivolt |
| Temperature Range | 200° to 375°F, (93°-191°C) |
| Hi-limit | Safety control turns off main gas supply at 435° F (224°C) |
| Safety Pilots | 100% gas shut off valve |
| Burners | Atmospheric pre-mix |
| Frypot | Stainless steel |
| Cabinet | All Stainless Steel construction, excluding rear and bottom braces. |
| Shortening Capacity | 35 lbs - 50 lbs |
| Cooking Capacity | 70 lbs of fries per hour |
| Cooking Area | 14" x 14.5" (35.3 cm x 37 cm) |

## STANDARD ACCESSORIES

- 2 Twin nickel plated baskets
- Rack type basket support
- Clean out rod
- 6" Adjustable chrome plated legs
- Drain pipe extension

## OPTIONS AND ACCESSORIES

- Stainless steel sides
- Filter systems, built-in Filtronic or Filter Mate under fryer filter
- Can bank units at no additional charge
- Front drain tray
- Casters
- Sediment tray
- Single or triple baskets
- Fryer cover
- Drain table

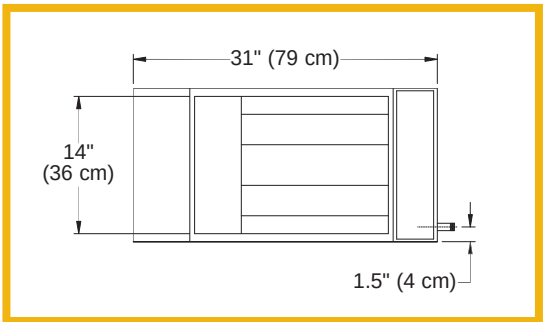


Top View

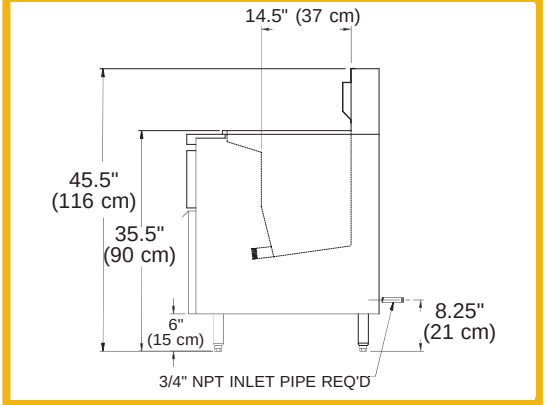


Side View

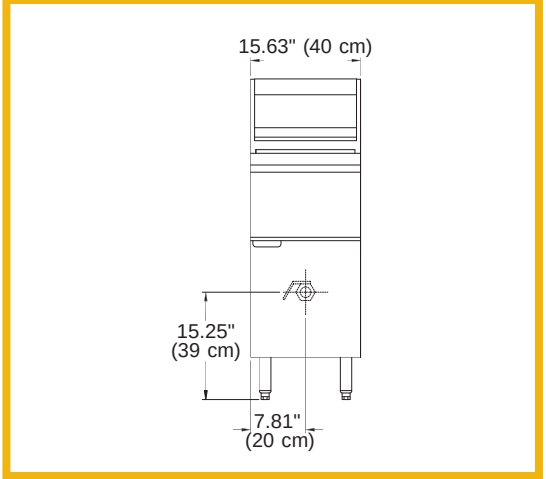


Front View

ANETS INC PO BOX 501, CONCORD, NH 03302-0501
509 ROUTE 3A, BOW, NH 03304 TEL: 603-225-6684, FAX:603-225-8497
L10-493 R1 www.anets.com
We reserve the right to change specifications without notice and without incurring any Obligation for equipment previously or subsequently sold.

ANETS