Model# **CIM75**

PROJECT NAME: _____ LOCATION: _____

ITEM: _____ MODEL: _____

Model **CIM75**

Ice Maker - Self Contained

The CIM75 produces up to 75 pounds of ice per day and includes a self-contained 25 pound storage bin. Stainless steel construction provides durability to a unit that is low-maintenance and easy to clean. The unit produces crystal clear bullet shaped ice that works great for applications in homes, restaurants, bars, hotels, grocery stores, and more. Suitable for freestanding or built in applications, this unit will run on standard household electrical current and is NSF and UL approved for commercial use.

FEATURE LIST

Model:	CIM75
Description:	Self-Contained Ice Maker
Voltage:	120V/60Hz/1Ph, 220V/50Hz/1Ph
Amps:	11.4
Ice Type:	Individual Bullet
Ice Cube Size:	1 1/4" x 1 1/4" x 1 1/4" 32mm x 32mm x 32mm
Power Consumption:	12.0kWh / 100lbs of ice
Unit Weight:	93 lb / 42 kg
Unit Dimensions:	16 1/2" W x 21 3/8" D x 32 1/2" H 419mm W x 541mm D x 826mm H
Shipping Weight:	104 lb / 47 kg
Shipping Dimensions:	23" W x 19" D x 36" H 584mm W x 483mm D x 914mm H

Specifications subject to change without notice.

Approvals: NSF, UL, CE

Model# **CIM75**

PLAN VIEW

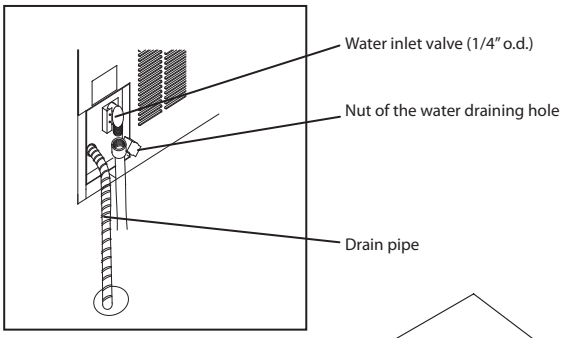

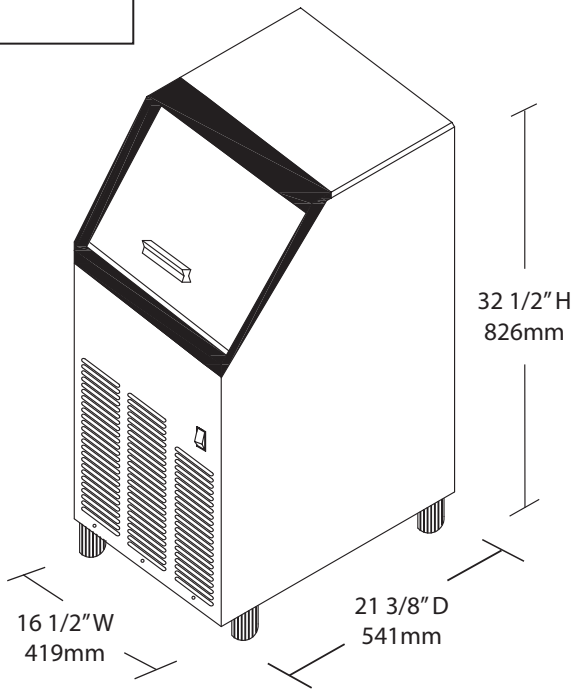

- Up to 75 lb (34 kg) daily ice production (based on 50/70° F)
- Produces crystal clear bullet shaped ice
- Stainless steel exterior
- 25lb storage bin with automatic overflow prevention
- Foamed in place insulation
- Air-cooled condenser
- Designed for household or commercial use
- For freestanding or built-in applications
- Requires use of a drain. Water filter recommended.
- **Standard Warranty:** 1 Year Parts, 1 Year On-Site Labor, and Additional 4 Year Compressor (part only)

DIMENSIONAL DATA

Model	Description	Weight	Dimensions
CIM75	Self-Contained Ice Maker	93 lb / 42 kg	16 1/2" W x 21 3/8" D x 32 1/2" H 419mm W x 541mm D x 826mm H