Model: **209-1, 210-1, 212-1 Compact Manual Slicer**

PROJECT NAME: _____ LOCATION: _____

ITEM: _____ MODEL #: _____

212-1

210-1

209-1

Knife Cover: The knife cover is designed to fit on the slicer only one way to ensure accurate placement every time.

Knife Hub: Knife hub bearings, belt, and motor are fully enclosed protecting them from food and other debris.

Table Rod: Separate table support rod is protected by the table casting and cover.

Underside: Components are covered by a metal plate protecting them from food and other debris.

Slice Deflector: Heavy duty deflector is securely fastened to the slicer, yet is still easy to remove without tools.

FEATURES LIST

Model	UPC
209-1	669452600918
210-1	669452601014
212-1	669452601212

SPECIFICATIONS

- Powerful motors
  - 209-1: ¼ HP, 115-60-1, 2.3 amps
  - 210-1: ¼ HP, 115-60-1, 2.5 amps
  - 212-1: ⅓ HP, 115-60-1, 2.7 amps
- 0 to 9/16" slice thickness
- Positive traction grooved belt drive
- Top mounted knife sharpener
- Hard chromed, hollow ground knife
- Belt driven, positive grooved knife
  - 209-1: Nominal 9" diameter
  - 210-1: Nominal 10" diameter
  - 212-1: Nominal 12" diameter
- Anodized aluminum construction
- Sealed splash zones
- Moisture proof On/Off buttons
- Gravity feed food chute
- Metal bottom enclosure
- Compact space saving design
- Removable slice deflector
- Heavy duty feet
- 8 foot cord and plug

Increased Cleanability and Sanitation Features - NSF/ANSI 8 - 2010 Standard

WARRANTY

One-year parts and labor

Intertek

NSF 2010

Specifications subject to change without notice

Approvals: cETLLus, NSF ANSI 8, 2010

Model: **209-1, 210-1, 212-1 Compact Manual Slicer**

PLAN VIEW

209-1, 210-1 & 212-1

Front View

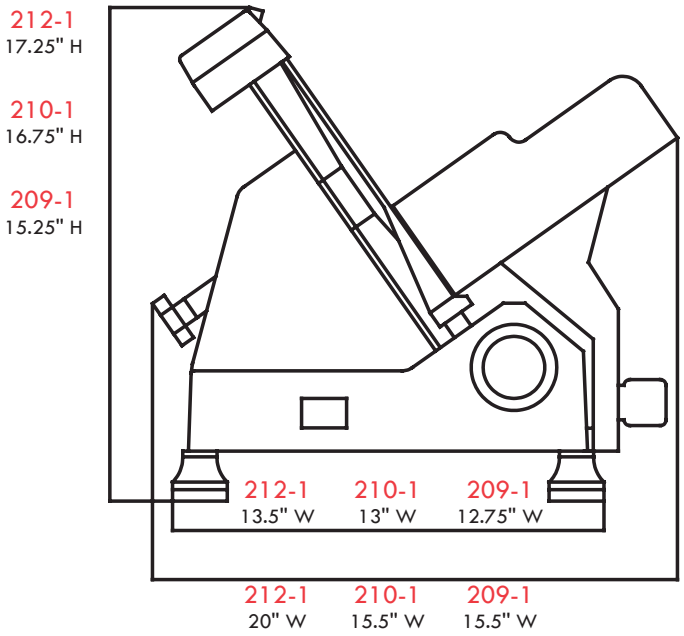

Side View

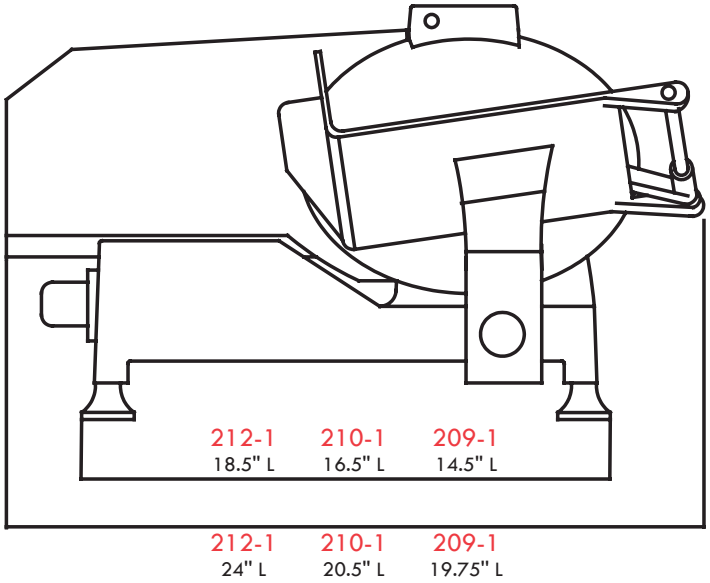

Plug Type - NEMA 5-15P

DIMENSIONAL DATA

Model	UPC	Knife Dia.	HP	Cutting Capatiy	Voltage	Amps	Unit Dimensions L x W x H	Net Weight	Shipping Dimensions L x W x H	Shipping Weight
209-1	669452600918	9"	1/4	6.5" H, 7.25" W, 6.25" Dia.	115-60-1	2.3	19.75" × 15.5" × 15.25"	31.4 lbs	21" × 18" × 17"	38 lbs
210-1	669452601014	10"	1/4	7.25" H, 8.62" W, 6.87" Dia.	115-60-1	2.5	20.5" × 15.5" × 16.75"	31.6 lbs	24" × 22" × 18"	42 lbs
212-1*	669452601212	12"	1/3	8.62" H, 9.75" W, 8" Dia.	115-60-1	2.7	24" × 20" × 17.25"	46 lbs	28" × 23" × 19"	57 lbs

Recommended Slicing per Day:

209-1	< 30 minutes
210-1	30-45minutes
212-1	1 Hour

209-1 & 210 Not recommended for slicing cheese.

*212-1 Recommeded for cheese slicing in small amounts.

Printed in U.S.A. 5-2013