Item #_____ C.S.I. Section 11420

MODEL: CMJ SERIES
GAS INFRARED CHEESEMELTER

Model CMJ36

BASIC MODELS:

CMJ24	24" cheesemelter broiler.
CMJ34	34" cheesemelter broiler.
CMJ36	36" cheesemelter broiler.
CMJ48	48" cheesemelter broiler.
CMJ60	60" cheesemelter broiler.
CMJ72	72" cheesemelter broiler.

KEY FEATURES:

- Stainless steel front, top, bottom and sides.
- Equipped with heavy-duty pre-mix atmospheric infrared burners.
- Standing pilot ignition system.
- Heavy-duty chrome plated grid rack and 3 position rack guide.
- Removable full width spillage pan.
- ¾" rear gas connection and gas pressure regulator.
- One year limited parts and labor warranty.

OPTIONAL FEATURES:

- Set of stainless steel wall mount brackets.
- Set of four 4" legs with adjustable feet.

DESCRIPTION:

Gas infrared cheesemelter broiler, Wolf Model No. _____. Stainless steel exterior. Equipped with heavy-duty pre-mix atmospheric infrared burners. Heavy-duty chrome plated grid rack and 3 position rack guide. ¾" rear gas connection and gas pressure regulator.

Exterior dimensions: ____"w x 20½"d x 19¹⁄₁₆"h.

CSA design certified. NSF listed.

Approved by_____

Date: _____

SPECIFY TYPE OF GAS WHEN ORDERING.
SPECIFY ALTITUDE WHEN ABOVE 2,000 FT.

WOLF RANGE COMPANY

Wolf Range Company
Division of ITW Food Equipment Group LLC
(800) 366-9653
www.wolfrange.com

F-39080 (04-07)

Ace Mart Restaurant Supply - Stores

Model CMJ Series
Gas Infrared Cheesemelter

INSTALLATION REQUIREMENTS:

1. A gas pressure regulator sized for this unit is included. Natural Gas 5.0" W.C. Propane Gas 10.0" W.C.
2. Gas line connecting to appliance must be ¾" diameter or larger. If flexible connectors are used, the inside diameter must be the same as the ¾" iron pipe.
3. An adequate ventilation system is required for commercial cooking equipment. Information may be obtained by writing to the National Fire Protection Association, 1 Batterymarch Park, Quincy, MA 02169, www.NFPA.org. When writing, refer to NFPA No. 96.
4. These units are manufactured for installation in accordance with National Fuel Gas Code, ANSI-Z223.1/NFPA #54 (latest edition). Copies may be obtained from The American Gas Association, Accredited Standards Committee Z223 @ 400N. Capital St. NW, Washington, DC 20001, or the Secretary Standards Council, NFPA, 1 Batterymarch Park, Quincy, MA 02169-7471.

   NOTE: In the Commonwealth of Massachusetts
   All gas appliances vented through a ventilation hood or exhaust system equipped with a damper or with a power means of exhaust shall comply with 248 CMR.
5. Clearances:

	Combustible	Non-Combustible
Rear	2"	0"
Sides	20"	0"
Bottom	10"	4"

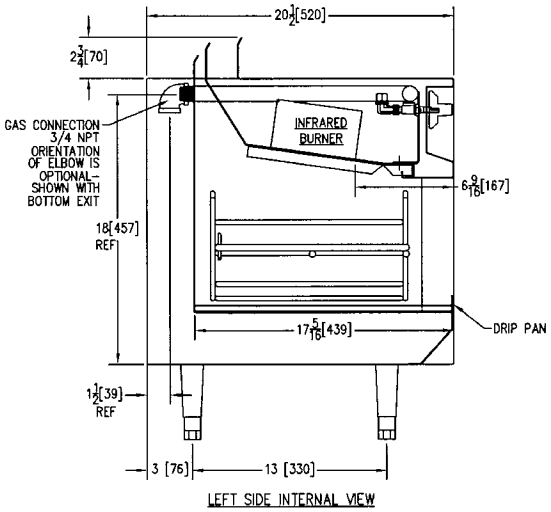

LEFT SIDE INTERNAL VIEW

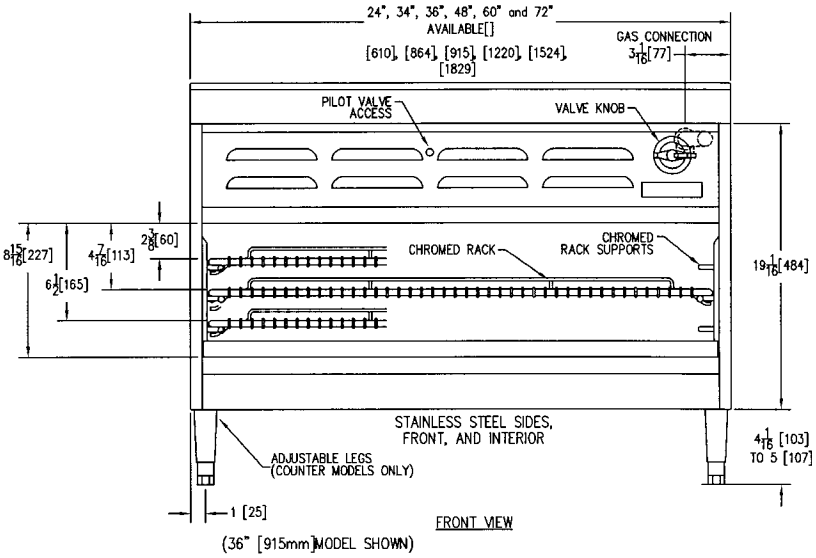

FRONT VIEW
(36" [915mm] MODEL SHOWN)

MODEL NO.	WIDTH	DEPTH	HEIGHT	NUMBER OF BURNERS	TOTAL BTU/hr.	APPROX. SHP. WT. (lbs./kg)
CMJ24	24"	20½"	19 1/16"	1	18,000	106/48
CMJ34	34"	20½"	19 1/16"	1	24,000	159/72
CMJ36	36"	20½"	19 1/16"	1	24,000	159/72
CMJ48	48"	20½"	19 1/16"	2	36,000	212/95
CMJ60	60"	20½"	19 1/16"	2	42,000	265/119
CMJ72	72"	20½"	19 1/16"	2	48,000	318/143

NOTE: In line with its policy to continually improve its product, Wolf Range Company reserves the right to change materials and specifications without notice.

This appliance is manufactured for commercial use only and is not intended for home use.

F-39080 (04-07)

Ace Mart Restaurant Supply - Stores