ITEM NO. _____

F-67 FRYER

F-67

Wells Fryer F-67 is one of the most durable and easy-to-use fryers in the industry. Swing-up elements allow the frypots to be removed for cleaning without difficulty. The low watt density heating element provides for extended oil life. Fry two different products at the same time using the two separate frypots.

Specifications

Overall Dimensions:	Inches	MM
Width	24 13/16	630
Depth	23 9/16	598
Height (incl. 4" legs)	16 3/8	416
Shortening Capacity Per Fry Pot:	**Lbs.**	**KG**
F-67	15 x 2	7 x 2
Temperature Range:	**Fahrenheit**	**Celsius**
F-67	275° to 375°	135° to 191°
Pre-Heat Time to 350˚ F:	**8 minutes**	
Watts Per Hour to Maintain 350˚ F:		**445**
Typical Production:	**Per Hour**	
French Fries (2-oz. servings)	480	
Chicken (pounds)	32	
Weights:	**Lbs.**	**KG**
Installed	57	26
Shipping	68	31

Features

- **Two full-size, rear-hanging, interchangeable fry baskets** are included with every fryer and allow for product versatility.
- **Swing-up elements,** located below the baskets, are heavy-duty stainless steel with a low watt density for longer oil life.
- **Element control housing** has a spring-loaded support rod to secure elements when in a raised position.
- **Two deep-drawn, removable containers** are made of nickel-plated steel and can hold up to fifteen pounds of oil per frypot.
- **A manual reset safety thermostat** will shut off the unit heating element power if an over-temperature condition is reached. A red signal light will indicate the over-temperature condition.
- **The F-67 Fryer** is Underwriters Laboratories, Inc. LISTED and meets the National Sanitation Foundation and Canadian standards.
- **A one-year warranty** against defects covers parts and labor

Accessories / Options

Basket, half-size (2 per fry pot), 20161

Basket, full size (1 per fry pot), 20162

Crumb Cradle, 20690

Fry Pot Cover, 21010

Legs, set of four, metal, 4" adjustable, 20563

Ace Mart Restaurant Supply

LISTED E6070 STD.4 LR 10836

MODEL F-67 FRYER

DIMENSIONS:

INCH / (MM)

MINIMUM CLEARANCE REQUIRED FROM UNIT TO THE NEAREST COMBUSTIBLE OBJECT.			
BACK	SIDE	BOTTOM	TOP
NA / NA	NA / NA	NA / NA	40 / (1016)

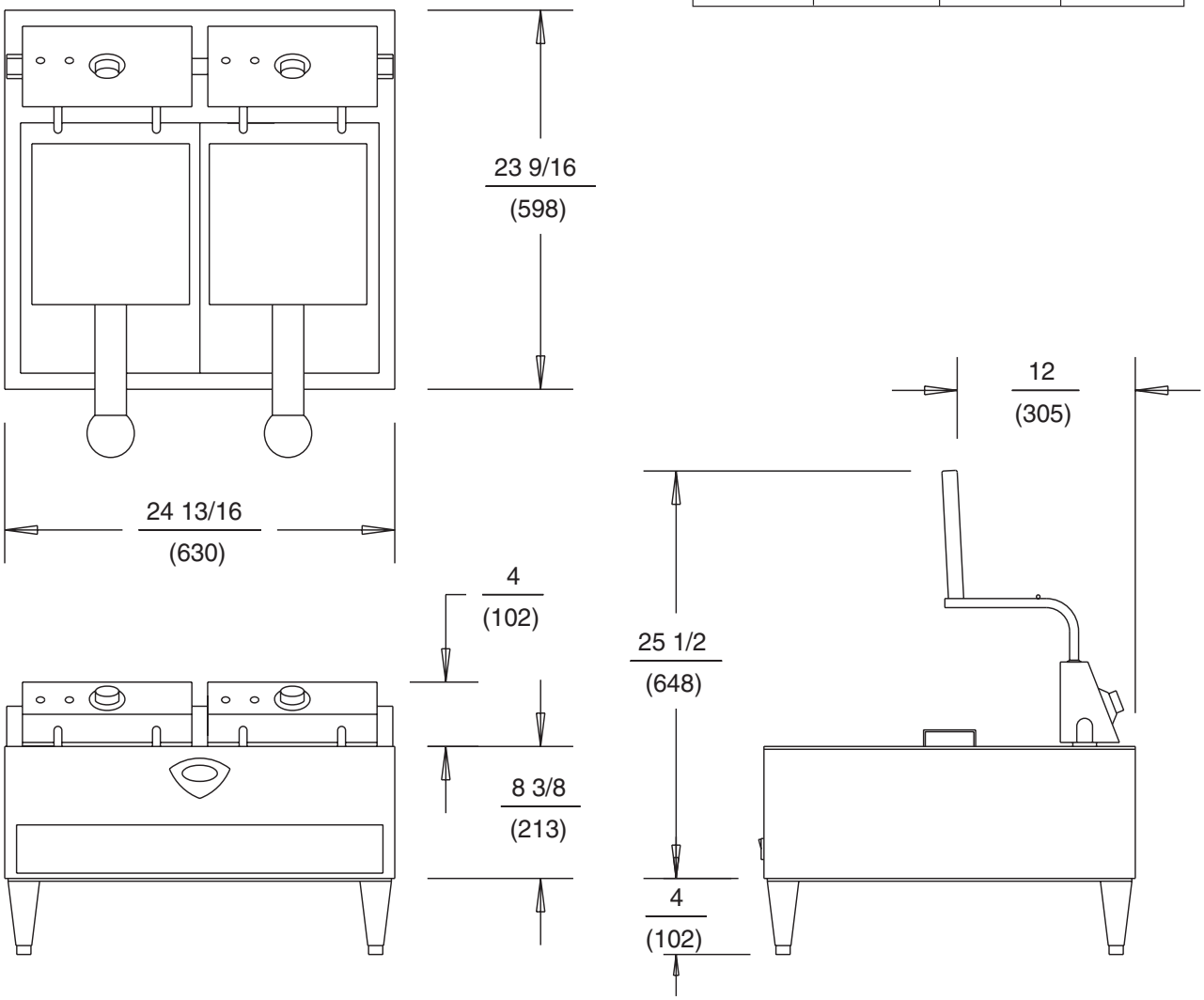

F-67 ELECTRICAL SPECIFICATIONS:

MODELS	VOLTS	WATTS	AMPS PER LINE PHASE 3			AMPS SINGLE PHASE	POWER SUPPLY CORD
			L1	L2	L3		
F-67	208	9200	38.3	22.1	22.1	44.2	NONE
F-67	240	9200	33.2	19.2	19.2	38.3	NONE

NOTE: Specifications are subject to change without notice.

WELLS MANUFACTURING COMPANY
2 ERIK CIRCLE, PO BOX 280, VERDI, NV 89439 U.S.A. • USA PHONE: (775) 689-5700 • FAX: (775) 689-5972
FOR ORDERS ONLY: (888) 356-5362 • FAX: (800) 356-5142 • www.wellsbloomfield.com
A SPECIALTY EQUIPMENT COMPANY • 2000 WELLS MANUFACTURING • PRINTED IN THE U.S.A. • 10/00 • REV(J) • PART NO. 37065

Ace Mart Restaurant Supply