WARING COMMERCIAL®

Quik Stik® Immersion Blender

WSB33X

PERFECT FOR QUICK, LIGHT-DUTY APPLICATIONS

Features

- 2-speed high-efficiency motor
- 7" fixed shaft
- Lightweight and compact
- All-purpose stainless steel blade
- 3-gallon, 12-quart capacity
- 6' cord with 3-prong plug
- Limited One Year Warranty

NEW Aggressive Blade Design

NSF® ETL LISTED US Intertek

Quik Stik® Immersion Blender

WSB33X

Specifications

Item	Electrical Information	Listings	Dimensions (H" x W" x D")	Warranty
WSB33X	120V, 100W 60Hz	ETL, NSF	16" x 4.5" x 4.5"	Limited 1 Year

Ordering Information

Description	Catalog #	Std Pkg.	Ship Wt. (lbs.)	Cubic Feet	UPC Code
Quik Stik® Immersion Blender	WSB33X	1	2.55 lbs.	.188	040072022029

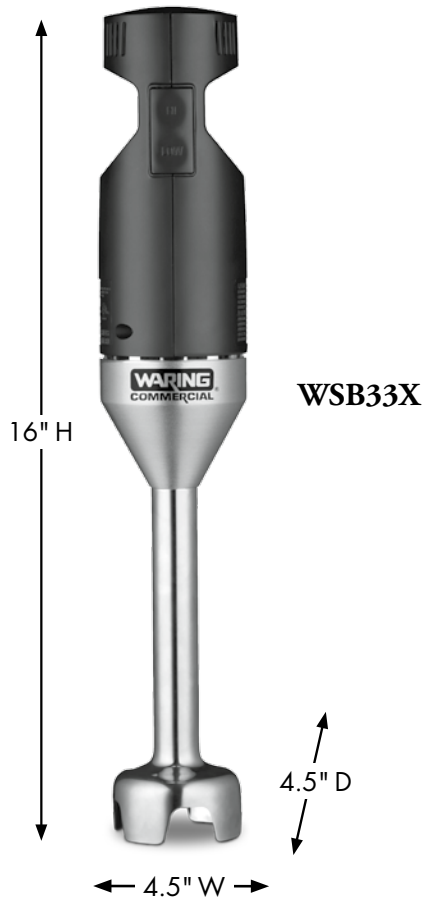

WSB33X

©2012 Waring Commercial • 314 Ella T. Grasso Ave. • Torrington, Connecticut 06790
Tel. (800) 492-7464 • Fax (860) 496-9008 • www.waringcommercialproducts.com
12WC130123
PG-29621