Item # _____ C.S.I. Section 11420

GRIDDLES & BROILERS

VCCB SERIES
COUNTER MODEL GAS CHARBROILER

Model VCCB47

- ☐ **VCCB25** 25¼" wide
- ☐ **VCCB36** 36" wide
- ☐ **VCCB47** 46¾" wide
- ☐ **VCCB60** 60" wide
- ☐ **VCCB72** 72" wide

STANDARD FEATURES

- Stainless steel sides, control panel, top trim, backsplash and grease trough.
- Full width front grease drawers.
- Heavy duty cast iron char-radiants and burners.
- 5¼" wide sloped cast iron grates are reversible for "level" broiling or self-cleaning. Cast in pitched grease trough in each grate blade provides fat run-off and controls flare-ups.
- One 14,500 BTU/hr. burner for each broiler grate.
- Standing pilot ignition system.
- One infinite heat control valve for each burner.
- Underburner deflector system reflects heat upwards creating a "Cool Zone" in the grease drawer and drip areas.
- 4" adjustable legs.
- ¾" rear gas connection and gas pressure regulator.
- One year limited parts and labor warranty.

SPECIFICATIONS

Low profile, high volume gas charbroiler, Vulcan Model No. _____. Stainless steel front, sides, top trim and grease trough. Full width front grease collection drawers. Heavy duty cast iron char-radiants and burners. 5¼" wide cast iron diamond grates. One 14,500 BTU/hr. burner for each broiling grate. Underburner deflector system reflects heat upwards. Standing pilot ignition system. One infinite heat control valve for each burner. 4" adjustable legs. ¾" rear gas connection and gas pressure regulator.

Exterior Dimensions:
_____" wide x 27¼" deep x 13" working height.

CSA design certified. NSF listed.

SPECIFY TYPE OF GAS WHEN ORDERING.
SPECIFY ALTITUDE WHEN ABOVE 5,999 FT.

OPTIONS

- ☐ Super-charger burner dividers.
- ☐ Diamond rod and waffle pattern cast iron grates.
- ☐ Round rod and diamond rod welded steel grates.

ACCESSORIES

- ☐ 10" deep plate rail.
- ☐ 6" Backsplash with tapered sides splash kit.
- ☐ Stainless steel stand with undershelf and casters.

a division of ITW Food Equipment Group LLC

P.O. Box 696 ■ Louisville, KY 40201 ■ Toll-free: 1-800-814-2028 ■ Local: 502-778-2791 ■ Quote & Order Fax: 1-800-444-0602

Ace Mart Restaurant Supply - Stores

VCCB SERIES
COUNTER MODEL GAS CHARBROILER

INSTALLATION REQUIREMENTS:

1. A gas pressure regulator supplied with the unit must be installed:
   Natural Gas 5.0" (127 mm) W.C.
   Propane Gas 10.0" (254 mm) W.C.
2. An adequate ventilation system is required for commercial cooking equipment. Information may be obtained by writing to the National Fire Protection Association, Batterymarch Park, Quincy, MA 02269. When writing refer to NFPA No. 96.
3. These units are manufactured for installation in accordance with National Fuel Gas Code, ANSI-Z223.1/NFPA #54 (latest edition). Copies may be obtained from The American Gas Association, Accredited Standards Committee Z223 @ 400 N. Capital St. NW, Washington, DC 20001, or the Secretary Standards Council, NFPA, 1 Batterymarch Park, Quincy, MA 02169-7471.

NOTE: In The Commonwealth of Massachusetts
All gas appliances vented through a ventilation hood or exhaust system equipped with a damper or with a power means of exhaust shall comply with 248 CMR.

4. CLEARANCES – This model series is for installation in noncombustible locations with the following clearances:

	Back	Right Side	Left Side
Above grid level	3"	0"	0"
Below grid level	3"	0"	0"

5. This appliance is manufactured for commercial installation only and is not intended for home use.

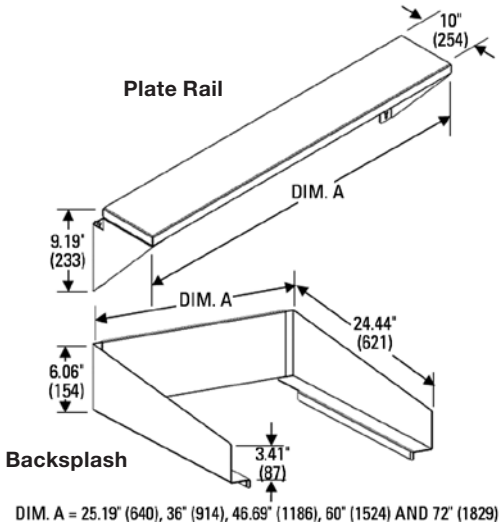

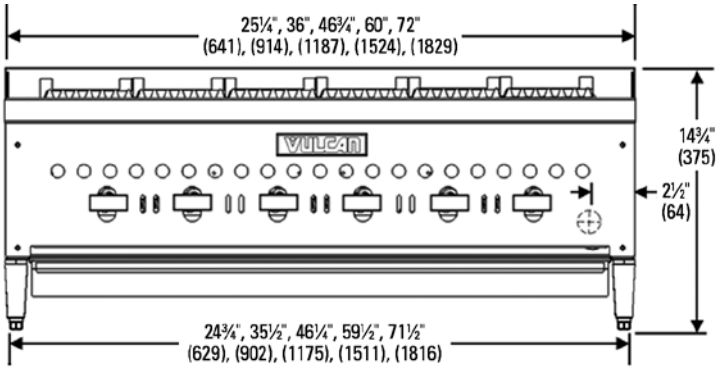

FRONT VIEW

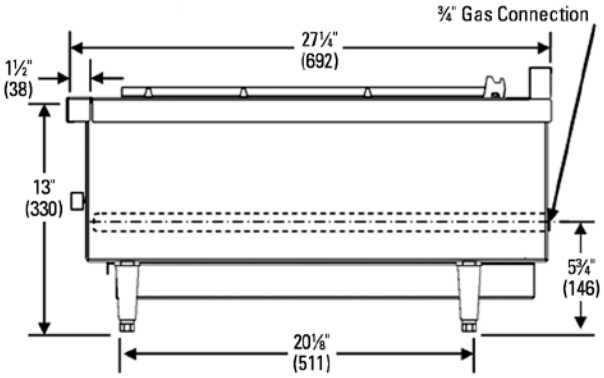

SIDE VIEW

MODEL	ACCESSORY CODE		
	BACKSPLASH	PLATE RAIL	STAND
VCCB25	SPLASH6-CB25	PLTRAIL-VCCB25	STAND/C-24
VCCB36	SPLASH6-CB36	PLTRAIL-VCCB36	STAND/C-36
VCCB47	SPLASH6-CB47	PLTRAIL-VCCB47	STAND/C-48
VCCB60	SPLASH6-CB60	PLTRAIL-VCCB60	STAND/C-60
VCCB72	SPLASH6-CB72	PLTRAIL-VCCB72	STAND/C-72

MODEL	WIDTH	DEPTH	OVERALL HEIGHT	WORKING HEIGHT*	BROILING AREA	# BURNERS	TOTAL BTU/HR	APPROX SHIP WT (LB/KG)
VCCB25	25¼"	27¼"	14¾"	13"	21½" X 20½"	4	58,000	265/120
VCCB36	36"				32" X 20½"	6	87,000	355/161
VCCB47	46¾"				43" X 20½"	8	116,000	460/209
VCCB60	60"				56⅜" X 20½"	11	159,500	600/272
VCCB72	72"				66⅜" X 20½"	13	188,500	720/327

VULCAN
a division of ITW Food Equipment Group LLC
P.O. Box 696 ■ Louisville, KY 40201 ■ Toll-free: 1-800-814-2028 ■ Local: 502-778-2791 ■ Quote & Order Fax: 1-800-444-0602

NOTE: In line with its policy to continually improve its products, Vulcan reserves the right to change materials and specifications without notice.

Ace Mart Restaurant Supply - Stores
Printed On Recycled Paper