Item # _____

C.S.I. Section 11420

VC4G SERIES

SINGLE DECK GAS CONVECTION OVENS

Model VC4GD

☐ **VC4GD** Solid state temperature controls adjust from 150° to 500°F. 60 minute timer with audible alarm.

☐ **VC4GC** Computer controls with digital time and temperature readouts. 99-hour timer with audible alarm. Roast and Hold cycle. Six preset menu selections. Shelf I.D. programming.

STANDARD FEATURES

- Stainless steel front, sides and top.
- Painted legs.
- Independently operated stainless steel doors with double pane windows.
- 44,000 BTU/hr. burner.
- Electronic spark igniter.
- 1/2 H.P. two speed oven blower-motor. 120/60/1 with 6' cord and plug. 9 amps.
- Oven cool switch for rapid cool down.
- Porcelain enamel on steel oven interior.
- Five nickel plated oven racks with eleven rack positions.
- 3/4" rear gas connection with combination gas pressure regulator and safety solenoid system.
- One year limited parts and labor warranty.

OPTIONS

☐ Stainless steel legs.

☐ Casters.

☐ Five hour timer in place of 60 minute timer (Model VC4GD).

☐ Roast & Hold control (Model VC4GD).

☐ Stainless steel open stand with storage rack.

☐ Second year extended limited parts and labor warranty.

ACCESSORIES

☐ Stainless steel rear enclosure.

☐ Extra oven rack(s).

☐ Rack hanger.

☐ Stainless steel drip pan.

☐ Flexible gas hose with quick disconnect and restraining device. Consult price book for available sizes.

☐ Down draft flue diverter for direct vent connection.

☐ Stacking kit.

SPECIFICATIONS:

Single section gas convection oven, Vulcan-Hart Model No. (VC4GD) (VC4GC). Stainless steel front, sides and top. Painted legs. Independently operated stainless steel doors with double pane windows. Non-sag insulation applied to the top, rear, sides, bottom and doors. Porcelain enamel on steel oven interior measures 29"w x 22 1/8"d x 20"h. Two interior oven lights. Five nickel plated oven racks measure 28 1/4" x 20 1/2". Eleven position nickel plated rack guides with positive rack stops. One 44,000 BTU/hr. burner. Electronic spark igniter. Furnished with a two speed 1/2 H.P. oven blower-motor. Oven cool switch for rapid cool down. 120 volt, 60 Hz, 1 ph power supply required. 6' cord and plug. 9 amps total draw.

Exterior dimensions: 40"w x 42 1/4"d x 56 3/4"h on 25 3/4" legs. Depth measurement includes door handles.

CSA design certified. NSF listed.

SPECIFY TYPE OF GAS WHEN ORDERING.

SPECIFY ALTITUDE WHEN ABOVE 2,000 FT.

MODEL: VC4G SERIES Single Deck Gas Convection Ovens

A2780 ISO9001 Vulcan-Hart Co.

VULCAN-HART COMPANY, P.O. BOX 696, LOUISVILLE, KY 40201, TEL. 1-800-814-2028
502-778-2791 QUOTE & ORDER FAX: 1-800-444-0602

VC4G SERIES

SINGLE DECK GAS CONVECTION OVENS

IMPORTANT

1. A combination gas pressure regulator and safety solenoid system is included in this unit. Natural gas is 3.5" W.C., Propane gas is 10.0" W.C.
2. An adequate ventilation system is required for commercial cooking equipment. Information may be obtained by writing to the National Fire Protection Association, Batterymarch Park, Quincy, MA 02289. When writing, refer to NFPA No. 96.
3. These units are manufactured for installation in accordance with ANSZ223.1 (latest edition), National Fuel Gas Code. Copies may be obtained from American Gas Association Inc., Accredited Standards Committee Z223, 400 N. Capitol St. NW, Washington, DC 20001 or the Secretary Standards Council, NFPA, 1 Batterymarch Park, Quincy, MA 02169-7471.
4. Clearances:

	Combustible	Non-combustible
Rear	2"	2"
Right Side	4"	4"
Left Side	1"	0"

5. This appliance is manufactured for commercial installation only and is not intended for home use.

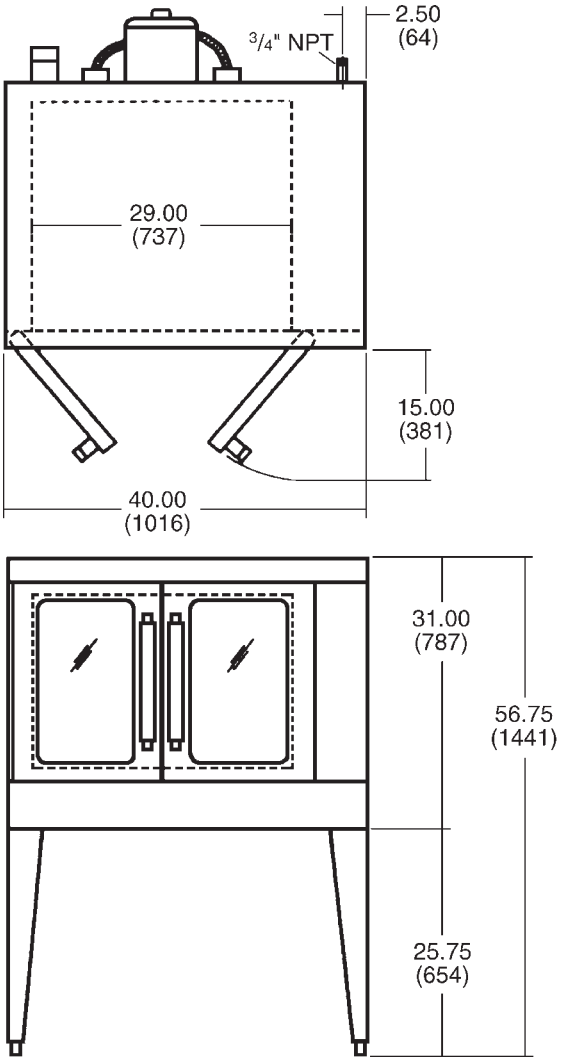

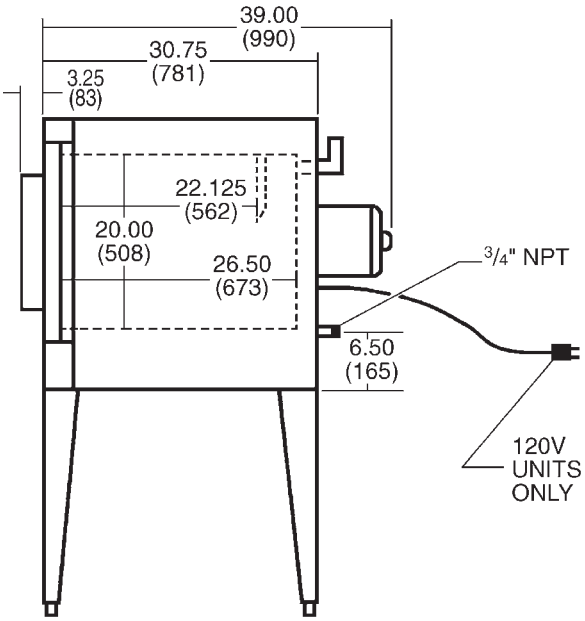

MODEL NO.	WIDTH	DEPTH (INCLUDES HANDLES)	HEIGHT	BTU/HR. PER OVEN	TOTAL BTU/HR.	ELECTRICAL	APPROX. SHP. WT.	
							LBS.	KG
VC4G	40"	42 1/4"	56 3/4"	44,000	44,000	120/60/1	497	225

NOTE: In line with its policy to continually improve its products, Vulcan-Hart Company reserves the right to change materials and specifications without notice.

VULCAN-HART COMPANY, P.O. BOX 696, LOUISVILLE, KY 40201, TEL. 1-800-814-2028
502-778-2791 QUOTE & ORDER FAX: 1-800-444-0602

F-32433 (03-08)

Printed On Recycled Paper