Item # _____ C.S.I. Section 11420

RESTAURANT RANGES

60” GAS RESTAURANT RANGE
6 OPEN BURNERS & 24” GRIDDLE

Model V60F-1

- ❑ **V60F-1** 2 Standard Ovens / 24” Griddle / Natural Gas
- ❑ **V60F-2** 2 Standard Ovens / 24” Griddle / Propane

STANDARD FEATURES

- Fully MIG welded frame
- Stainless steel front, backriser, lift-off high shelf
- 6” Stainless steel adjustable legs
- 28,000 BTU/hr open top burners with lift-off heads
- Individual pilot for each burner
- 12” x 12” cast top grates with aeration bowls
- Welded crumb tray
- 35,000 BTU/hr standard oven cavity measures 26 1/4”d x 22”w x 14 1/2”h
- Oven thermostat adjusts from Low to 500°F
- One oven rack and four rack positions for each oven
- 5/8” thick x 24”w griddle, 30,000 BTU/hr.
- 3/4” rear gas connection and gas pressure regulator
- One year limited parts and labor warranty

ACCESSORIES (Packaged & Sold Separately)

- ❑ Extra oven rack, includes set of of two rack guides
- ❑ Reinforced backriser and high shelf for mounting salamander broiler
- ❑ Set of six casters (two locking)

Side mounted grease trough

SPECIFICATIONS

63” wide gas restaurant range, Vulcan Model No. V60F-1. Stainless steel front, sides, backriser, high shelf, oven handle and bullnose. High temperature burner T knobs with set screw. Nickle plated bullet feet. Porcelain door liner and oven bottom. Six 28,000 BTU/hr. cast top burners with lift-off burner heads. Individual pilot for each burner. 12” x 12” cast top grates with aeration bowls. Heavy duty top grates and burner heads. 5/8” thick x 24”w griddle, 30,000 BTU/hr. Compression spring door hinge system for durability. 35,000 BTU/hr. Two standard ovens each measure 26 1/4”w x 22”d x 14 1/2”h. Thermostat adjusts from Low to 500°F. One oven rack with four rack positions for each oven. 3/4” rear gas connection and gas pressure regulator. Total input: 268,000 BTH/hr.

Exterior Dimensions:
32”d x 63”w x 58”h on 6” adjustable legs

a division of ITW Food Equipment Group LLC

P.O. Box 696 ▪ Louisville, KY 40201 ▪ Toll-free: 1-800-814-2028 ▪ Local: 502-778-2791 ▪ Quote & Order Fax: 1-800-444-0602

NOTE: In line with its policy to continually improve its products, Vulcan reserves the right to change materials and specifications without notice.

F-37397 (06/10)

Printed On Recycled Paper

60” GAS RESTAURANT RANGE
6 OPEN BURNERS & 24” GRIDDLE

INSTALLATION INSTRUCTIONS

1. A pressure regulator sized for this unit is included. Natural gas 5.0” W.C., propane gas 10.0” W.C.
2. Gas line connecting to range must be 3/4” or larger. If flexible connectors are used, the inside diameter must be 3/4” or larger.
3. An adequate ventilation system is required for commercial cooking equipment. Information may be obtained by writing to the National Fire Protection Association, 1 Batterymarch Park, Quincy, MA 02269, www.NFPA.org. When writing, refer to NFPA No. 96.
4. These units are manufactured for installation in accordance with ANSZ223.1A (latest edition), National Fuel Gas Code. Copies may be obtained from The American Gas Association, 400 N Capitol St. NW, Washington, DC 20001, www.AGA.org.
5. Clearances

	Rear	Sides
Combustible	6”	10”
Standard Oven Non-combustible	0”	0”
Convection Oven Non-combustible	Min. 4”	0”

6. For proper combustion, install equipment on adjustable legs or casters provided with unit.
7. For proper combustion, install equipment on adjustable legs or casters provided with unit.

NOTE: In line with its policy to continually improve its product, Vulcan reserves the right to change materials and specifications without notice.

Specify type of gas when ordering. Specify altitude when above 2,000 feet.

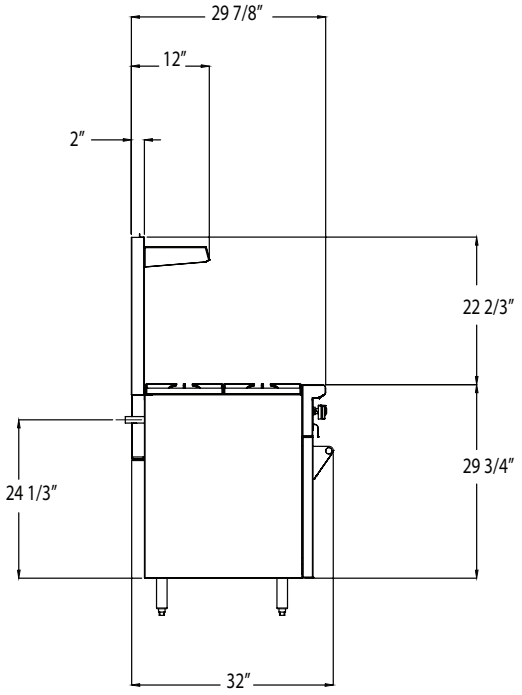

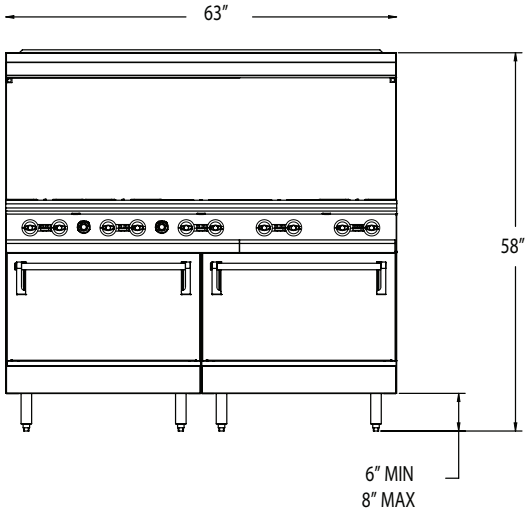

TOP CONFIGURATION	MODEL NUMBER	DESCRIPTION	TOTAL INPUT BTU / HR	SHIPPING WEIGHT LBS / KG
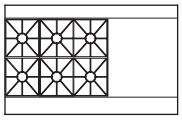	V60F-1	6 Burners / 2 Standard Ovens / 24” Griddle Natural Gas	268,000	815 / 370
	V60F-2	6 Burners / 2 Standard Ovens / 24” Griddle Propane	268,000	815 / 370

This appliance is manufactured for commercial use only and is not intended for home use.

a division of ITW Food Equipment Group LLC

P.O. Box 696 ▪ Louisville, KY 40201 ▪ Toll-free: 1-800-814-2028 ▪ Local: 502-778-2791 ▪ Quote & Order Fax: 1-800-444-0602

NOTE: In line with its policy to continually improve its products, Vulcan reserves the right to change materials and specifications without notice.

Printed On Recycled Paper