Item # _____ C.S.I. Section 11420

S T E A M

C24EO SERIES
ELECTRIC BOILERLESS/ CONNECTIONLESS STEAMER

Model C24EO3

ENERGY STAR

LISTED

CLASSIFIED
IN ACCORDANCE WITH NSF STD. #4

SPECIFICATIONS

Single compartment electric connectionless steamer, Vulcan-Hart Model No. C24EO _____. 304 stainless steel exterior. Stainless steel cooking compartment. Generator pan is stainless steel with stamped water level line. Efficient steam generating system requires no water or drain connection. Solid sheathed tubular elements embedded in 1" thick cast aluminum sealed to pan bottom with thermal transfer compound for even heat distribution. Controls include three position control switch (timed cooking / Off / constant cooking). 60 minute timer. Low water light and audible signal. Heavy duty doors and door latch mechanisms. Power required 208 or 240 volt, 60 Hz, 1 or 3 phase. Phase is field convertible.

Exterior Dimensions:
C24EO3: 24"w x 33"d x 19½"h.
C24EO5: 24"w x 33"d x 26"h.

UL listed. Classified by UL to NSF std. #4. Meets ENERGY STAR® performance levels.

- ☐ **C24EO3** 3 pan capacity, 8 KW input
- ☐ **C24EO5** 5 pan capacity, 12 KW input

STANDARD FEATURES

- Stainless steel exterior.
- Stainless steel cooking compartment.
- Generator pan is stainless steel with stamped water level line.
- Efficient steam generating system, requires no water or drain connection.
- Solid sheathed tubular elements (8 KW)(12 KW) embedded in 1" thick cast aluminum sealed to pan bottom with thermal transfer compound for even heat distribution.
- Controls include three position control switch (timed cooking / Off / constant cooking). 60 minute timer. Low water light and audible signal.
- Heavy duty doors and door latch mechanisms.
- C24EO3 is shipped for 208/60-50/3 electrical service. Can be field converted to 208/60-50/1 and 240/60-50/3 and 240/60-50/1.
- C24EO5 is shipped for 208 or 240 volt, 60 Hz, 1 or 3 phase. Phase is field convertible. Voltage is NOT field convertible.
- One year limited parts and labor warranty.

OPTIONS

- ☐ 480 volt, 60 Hz, 3 phase power supply, includes step down transformer.
- ☐ Second year extended limited parts and labor warranty.

ACCESSORIES (Packaged & Sold Separately)

- ☐ 4" counter legs
- ☐ 12" x 20" stainless steel pans:
  1" deep (solid) (perforated). Qty._____.
  2½" deep (solid) (perforated). Qty._____.
  4" deep (solid) (perforated). Qty._____.
- ☐ Stainless steel pan cover. Qty._____.
- ☐ Open leg stand.
- ☐ 28" open leg stand with 24" x 28"h pan slides.
- ☐ 34" open leg stand with 24" x 28"h pan slides.
- ☐ Casters for open leg stand.
- ☐ Set of two universal pan slides for open leg stand.
- ☐ Stand sliding shelf.
- ☐ Stacking kit for two units with hardware, counter mount.
- ☐ Single point electrical connection kit 3-phase only
- ☐ Floor legs, 6".
- ☐ Floor caster, 6".
- ☐ Pull-out 12" x 20" sliding shelf (cooking compartment). Qty._____.
- ☐ Cord and plug set.

VULCAN
a division of ITW Food Equipment Group LLC
P.O. Box 696 ▪ Louisville, KY 40201 ▪ Toll-free: 1-800-814-2028 ▪ Local: 502-778-2791 ▪ Quote & Order Fax: 1-800-444-0602

F37487 (12/12)

Ace Mart Restaurant Supply - Stores

C24EO SERIES
ELECTRIC BOILERLESS/ CONNECTIONLESS STEAMER

EQUIPMENT CLEARANCE:

Rear: 6" Right and left side: 0"

PAN CAPACITIES:

MODEL	1" Deep	2½" deep	4" deep
C24EO3	6	3	2
C24EO5	10	5	3

WATER QUALITY STATEMENT:

The fact that a water supply is potable is no guarantee that it is suitable for steam generation. Your water supply must be within these general guidelines:

HARDNESS*	less than 3 grains
SILICA	less than 13 ppm
TOTAL CHLORIDE	less than 4.0 ppm
pH RANGE	7-8
UN-DISSOLVED SOLIDS	less than 5 microns

* 17.1 ppm = 1 grain of hardness

Other factors affecting steam generation are iron content, amount of chloridation and dissolved gases. Water supplies vary from state to state and from locations within a state. Therefore it is necessary that the local water treatment specialist be consulted before the installation of any steam generating equipment.

SERVICE CONNECTIONS:

Electrical Connection to Electrical Box: 1⅛" (29mm) conduit.

Vent

Drain: ½" NPT nipple.

NOTE:

- Dimensions which locate the above connections have a tolerance of + or -3" (+ or -75 mm).
- It is the responsibility of the owner and installer to comply with local codes for installation.
- The installer may be required to provide means to reduce boiler drain water temperature to 140°F or less.
- If a drain line is connected to the steamer, the material must be suitable for 212°F water. If no drain plumbing is connected, a suitable catch pan must be used.
- This appliance is manufactured for commercial installation only and is not intended for home use.

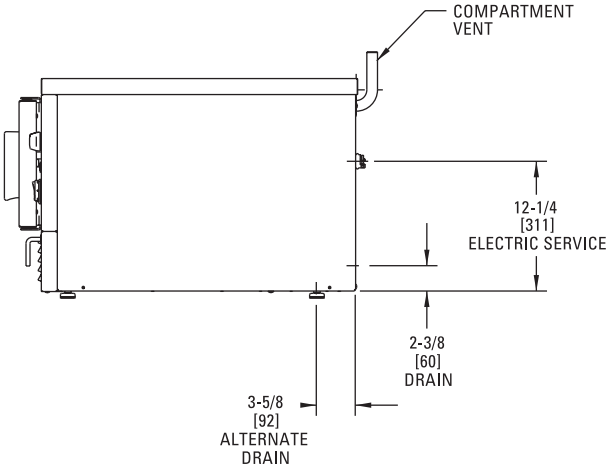

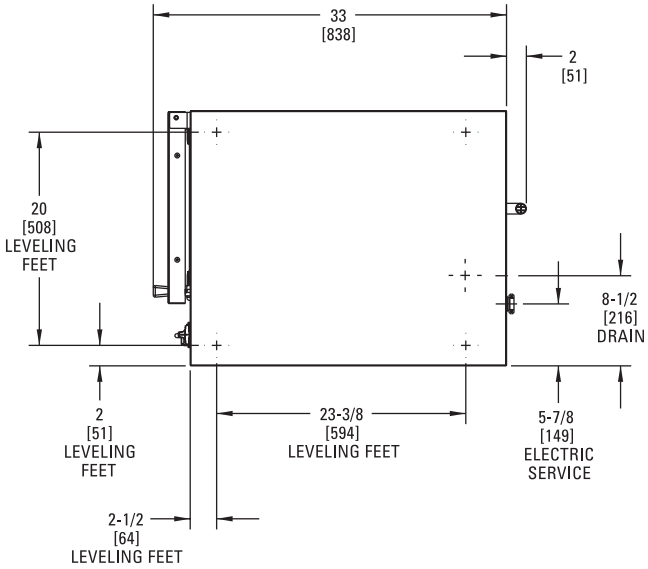

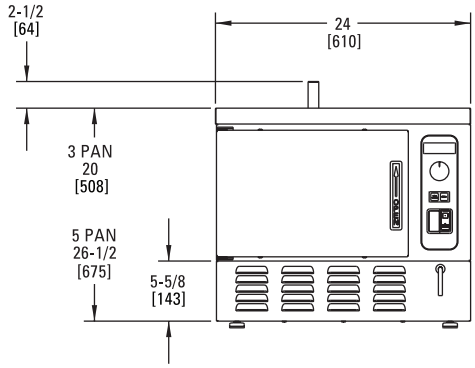

MODEL	VOLTS	WATTS	AMPS 1-PHASE	AMPS 3-PHASE
C24EO3	208	8000	38.5	22.2
	240	8000	33.3	19.2
C24EO5	208	12000	57.7	33.3
	240	12000	50.0	28.9
	480	12000	25.0	14.4

a division of ITW Food Equipment Group LLC

P.O. Box 696 ■ Louisville, KY 40201 ■ Toll-free: 1-800-814-2028 ■ Local: 502-778-2791 ■ Quote & Order Fax: 1-800-444-0602

NOTE: In line with its policy to continually improve its products, Vulcan reserves the right to change materials and specifications without notice.

Ace Mart Restaurant Supply - Stores

Printed On Recycled Paper