Project:

Item Number:

Quantity:

CAYENNE® STANDARD-DUTY 10LB ELECTRIC FRYERS

40705

40707

Cayenne® Standard-Duty Electric Fryers

MODELS

40705	**FFA7110**	**Countertop Fryer, 10 lb.**
40706	**FFA8110**	**Countertop Fryer, 10 lb.**
40707	**FFA7020**	**Dual Countertop Fryer, 2 x 10 lb.**
40708	**FFA8020**	**Dual Countertop Fryer, 2 x 10 lb.**

DESCRIPTION

Vollrath Cayenne® Standard Duty Fryers are designed to create a delicious variety of crisp fried food with minimal fuss. Delight your customers with french fries, chicken, seafood, and more.

FEATURES

- ❑ Ideal for small pubs, colleges, and product-specific applications
- ❑ Dual unit provides increased volume and separation of food types to prevent flavor transfer from oil
- ❑ Lift-out, one-piece stainless steel tank with carrying handles for easier cleaning
- ❑ Minimal footprint to accommodate tight counter spaces
- ❑ Thermostatically controlled to 375° F (190° C)
- ❑ Automatic thermal overload shutoff at 390° F (199° C) for safety
- ❑ Micro-switch shuts down unit for safety when element box is removed
- ❑ Quick heat-up and temperature recovery time between loads
- ❑ Nickel-plated steel wire basket with cool-touch handle
- ❑ "Power On" indicator light
- ❑ Non-skid rubber feet prevent slipping
- ❑ Ships with two baskets per unit
- ❑ Dual unit features removable removable element box assemblies for easy cleaning and versatility. Each box is wired separately and with its own 5 ft. (1.5 m) cord and plug

WARRANTY: All models shown come with Vollrath's standard warranty against defects in materials and workmanship. For full warranty details, please refer to the Vollrath Equipment and Smallwares Catalog.

Agency Listings

NSF, ETL Intertek

Due to continued product improvement, please consult www.vollrathco.com for current product specifications.

Approvals	Date

Setting the Standard™

www.vollrathco.com

The Vollrath Company, L.L.C.
1236 North 18th Street
Sheboygan, WI 53081-3201 U.S.A.
Customer Service: 800.628.0830
Canada Customer Service: 800.695.8560
Main Fax: 800.752.5620 or 920.459.6573

Technical Services: 800.628.0832
Technical Services Fax: 920.459.5462

CAYENNE® STANDARD-DUTY 10LB ELECTRIC FRYERS

MODELS

40705	FFA7110	Countertop Fryer, 10 lb.
40706	FFA8110	Countertop Fryer, 10 lb.
40707	FFA7020	Dual Countertop Fryer, 2 x 10 lb.
40708	FFA8020	Dual Countertop Fryer, 2 x 10 lb.

DIMENSIONS

Dimensions shown in inches (cm).

40705 and 40706

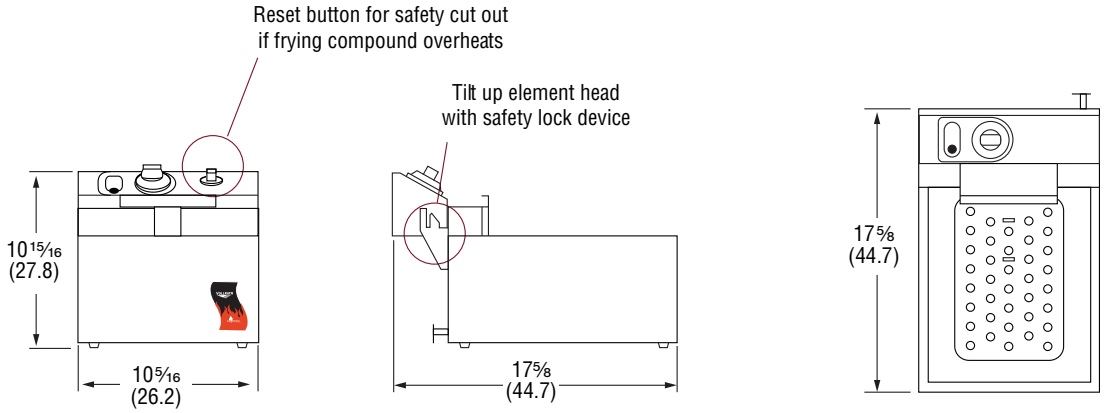

Front View *Side View* *Top View*

40707 and 40708

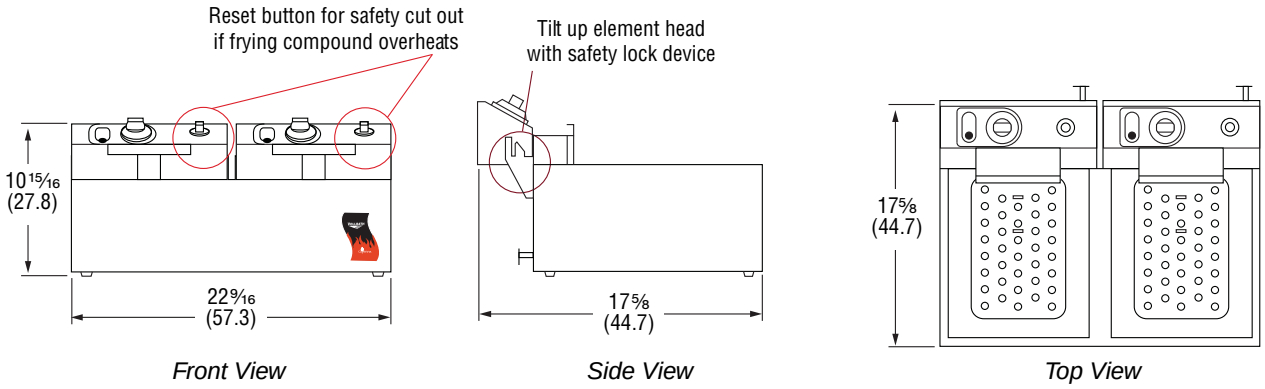

Front View *Side View* *Top View*

SPECIFICATIONS

Item	Number of Wells	Watts	Volts	Amps	Ship Weight LB (Kg)	Plug
40705	1	1800	120	15	15 (6.8)	5-15P
40706	1	2500	220	11.3	15 (6.8)	6-15P
40707*	2	1800 per well	120	15 per well	30 (13.6)	5-15P
40708*	2	2500 per well	220	11.3 per well	30 (13.6)	6-15P

*Dual unit requires two receptacles.

Receptacles

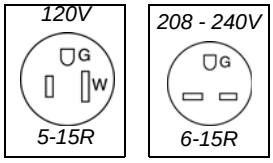

The Vollrath Company, L.L.C.
1236 North 18th Street
Sheboygan, WI 53081-3201 U.S.A.
Customer Service: 800.628.0830
Canada Customer Service: 800.695.8560
Main Fax: 800.752.5620 or 920.459.6573

Technical Services: 800.628.0832
Technical Services Fax: 920.459.5462

www.vollrathco.com

©2011 The Vollrath Company L.L.C.

Form Number L35742 3/11
Printed in USA