Project:

Item Number:

Quantity:

CAYENNE® CHEESE MELTER/WARMER OVEN

Cayenne® Cheese Melter/Warmer Oven

MODELS

40700 **Cheese Melter/Warmer Oven**

FEATURES

- ❑ Infinite control
- ❑ Removable food grid can be slid into three positions to accommodate different size foods and control the distance from the heating element
- ❑ Indicator lamp provides visual notification the element is heating
- ❑ Crumb tray is removable for easy clean-up
- ❑ Removable rear panel enables “pass-through” use
- ❑ Adjustable feet
- ❑ Stainless steel construction is robust and easy to clean
- ❑ 3kW quartz heading element
- ❑ 4 ft. (1.2 meters) cord with plug

DESCRIPTION

Vollrath's versatile stainless steel cheese melter/warmer oven provides melting, grilling, roasting and browning functions in a compact countertop unit. It is ideal for melting and gratinating cheese on sandwiches, soups, nachos, etc. Additionally, it can be used for warming pizza, breads and rolls, pastries, or croissants.

IMPORTANT

There must be a minimum 4" (10 cm) between the cheese melter/warmer oven and any surrounding walls. The surrounding walls and countertop surfaces must be made of non-combustible materials. The unit must be installed in accordance with local fire and building regulations.

WARRANTY: All models shown come with Vollrath’s standard warranty against defects in materials and workmanship. For full warranty details, please refer to the Vollrath Equipment and Smallwares Catalog.

Agency Listings

c UL us LISTED

NSF

Due to continued product improvement, please consult www.vollrathco.com for current product specifications.

Approvals	Date

Setting the Standard™

www.vollrathco.com

The Vollrath Company, L.L.C.
1236 North 18th Street
Sheboygan, WI 53081-3201 U.S.A.
Customer Service: 800.628.0830
Canada Customer Service: 800.695.8560
Main Fax: 800.752.5620 or 920.459.6573

Technical Services: 800.628.0832
Technical Services Fax: 920.459.5462

CAYENNE® CHEESE MELTER/WARMER OVEN

MODELS **40700** **Cheese Melter/Warmer Oven**

DIMENSIONS

Dimensions shown in inches (cm).

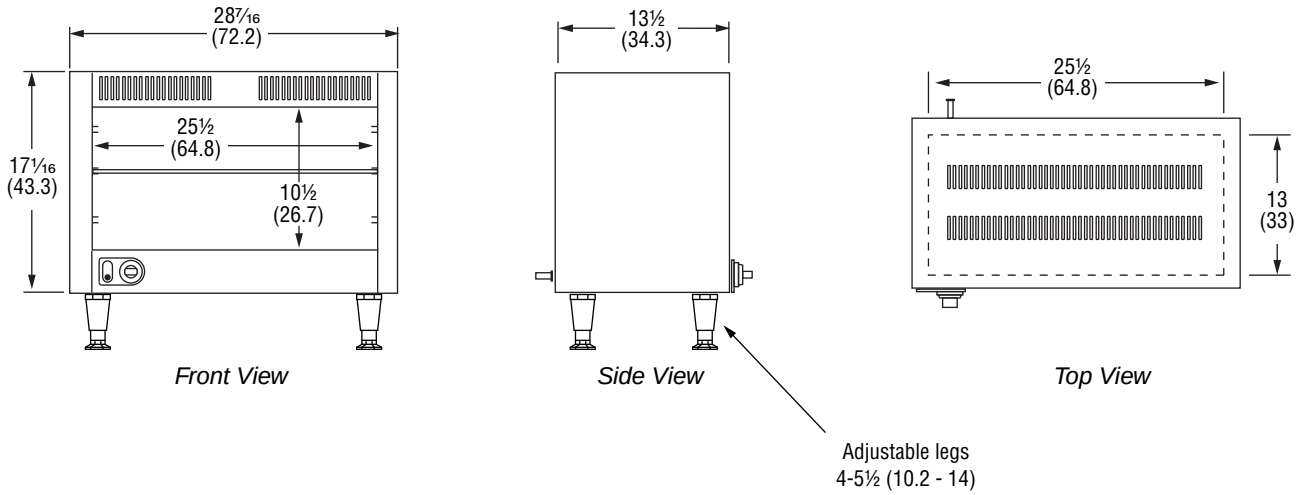

ELECTRICAL SPECIFICATIONS

Item	Voltage	Watts	Amps	Plug
40700	208-240	2253–3000	10.8–12.5	6-20P

Receptacle

208/240V

6-20R

The Vollrath Company, L.L.C.
1236 North 18th Street
Sheboygan, WI 53081-3201 U.S.A.
Customer Service: 800.628.0830
Canada Customer Service: 800.695.8560
Main Fax: 800.752.5620 or 920.459.6573

Technical Services: 800.628.0832
Technical Services Fax: 920.459.5462

www.vollrathco.com

©2011 The Vollrath Company L.L.C. Form Number L35802 2/11
Printed in USA