REFRIGERATOR MANUFACTURER
Turbo air
more durable,convenient,beautiful

1250 Victoria St
Carson, CA 90746
Tel. 310-900-1000
Fax. 310-900-1077
www.turboairinc.com

Project :	
Model # :	
Item # :	Qty :
Available W/H :	
Approval :	

Pizza Prep Table

Food Prep Tables-Pizza Prep
Super Deluxe Series

Model : TPR-93SD

EXCEPTIONAL 3 YEAR PARTS & LABOR WARRANTY

FEATURES / BENEFITS

Stainless Steel Cabinet Construction
The Turbo Air Super Deluxe model boasts a stainless steel interior and exterior (galvanized steel back & bottom). It guarantees the utmost in cleanliness and long product life. The Super Deluxe can add a touch of style to the most refined setting.

Sturdy, Clean Stainless Shelving
Shelves are the most important part of cleanliness as they come in direct contact with food. After a while, PVC coated wire shelves may peel, rust and lead to unsanitary conditions. Only the Turbo Air Super Deluxe series uniquely provides stainless shelving.

Extra Deep Cutting Board
Our cutting board is 19 1/4" deep and 1/2" thick to provide ample working space, and is made of easy to use and sanitize LDPE (Low Density Polyethylene). The new side rail cutting board bracket makes it easy to secure and remove the cutting board.

Front Breathing, Side Mount Compressor Unit
Through positioning the compressor to the side, the refrigerator can be serviced without being moved. By innovatively creating a front breathing feature, this model can provide high efficiency in narrow spaces.

Insulated Pan Cover

High-Density Polyurethane Insulation
The entire cabinet structure and solid doors are foamed-in-place using high density, CFC free polyurethane insulation.

Efficient Refrigeration System
Turbo Air's solid door refrigerators are designed with oversized and balanced (CFC Free R-134A) refrigeration systems. These include efficient evaporators and condensers for faster cooling and greater efficiency.

Excellent Cooling System
The powerful forced-air refrigeration system maintains the storage cabinet at a constant temperature. The evaporator fan and a newly designed stainless steel louver allow uniform distribution of cold air over the food pans and throughout the unit to keep food temperature within the NSF standard 7 requirements.

Ergonomically Designed Doors
Customers' fatigue fades away with easy grip handles and doors that open effortlessly. These features along with self-closing doors make this the ultimate choice in customer convenience. ABS sheet door liners resist water condensation with thermal efficiency.

Magnetic Door Gaskets
Magnetic door gaskets are of one piece construction, removable without tools for ease of cleaning and replacement.

Refrigerator Holds 33°F ~ 41°F for the Best in Food Preservation

Model	Swing Door	CU./FT.	#of Shelves	#of Pans	HP	AMPS	Crated Weight (lbs.)	L x D* x H† (inches)
TPR-93SD	3	31	6	12	2/3	11	577	93 3/8 x 32 1/4 x 36

Ver.201301

* Depth does not include 3" for cutting boards and 1" for rear spacers. † Height does not include 5-7/8" for caster height.

Pizza Prep Table

Food Prep Tables-Pizza Prep
Super Deluxe Series

Model : TPR-93SD

ELECTRICAL DATA	
Voltage	115/60/1
Plug Type	NEMA-5-15P
Full Load Amperes	11
Compressor HP	2/3
Cord Length ft.	8
Refrigerant	R-134A
DIMENSIONAL DATA	
Ext. Length Overall in.	93 3/8 (2378mm)
Ext. Depth Overall in.*	32 1/4 (819mm)
Ext. Height Overall in.†	36 (914mm)
# of Doors	3
# of Shelves	6
# of Pans	12
Net Capacity cu. ft.	31
Gross Weight lbs.	577
Net Weight lbs.	536

Design and specifications subject to change without notice.
Actual shipping weight may differ due to extra packing materials for product protection.
* Depth does not include 3" for cutting boards and 1" for rear spacers.
† Height does not include 5-7/8" for caster height.

- **WARRANTY : Exceptional 3 Year Parts and Labor Warranty**
  Additional 2 Year Warranty on Compressor

- SELF-CONTAINED SYSTEM
- 4" DIA. SWIVEL CASTERS
- STANDARD 1/3 SIZE, 6" DEEP CONDIMENT PANS INCLUDED
- 19 1/4" DEEP, 1/2" THICK CUTTING BOARD INCLUDED
- 2.5" DIA. CASTERS AVAILABLE (OPTIONAL)
- HALF SIZE PAN RACK FOR 18" X 26" SHEET PANS AVAILABLE (OPTIONAL)

- **OPTIONAL ACCESSORIES :**
  - ❑ 2.5" Diameter casters
  - ❑ 5" Diameter casters
  - ❑ 6" ABS plastic legs
  - ❑ Additional stainless steel shelves
  - ❑ Half size bun tray racks

PLAN VIEW

(unit : inch)

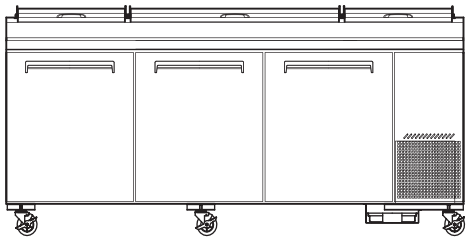

FRONT VIEW

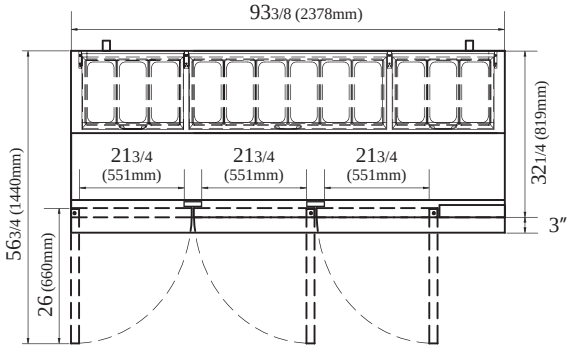

PLAN VIEW

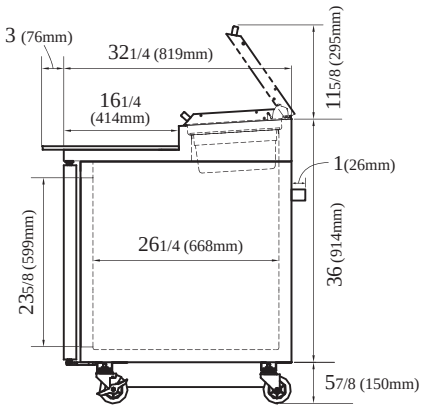

SIDE VIEW

Ver.201301

- **Turbo Air** : 800-627-0032
- **GK** : 800-500-3519
- **Warranty** : 800-381-7770
- **AC** : 888-900-1002