REFRIGERATOR MANUFACTURER
Turbo air
more durable,convenient,beautiful

1250 Victoria St
Carson, CA 90746
Tel. 310-900-1000
Fax. 310-900-1077
www.turboairinc.com

Project :	
Model # :	
Item # :	Qty :
Available W/H :	
Approval :	

Chef Base

Chef Bases
Super Deluxe Series

Model : TCBE-82SDR

- Drawer Pans Not Included

FEATURES / BENEFITS

- **Strong Body and Durable Construction**
  Built with heavy duty, 304 stainless steel (16 gauges) Chef Base top is manufactured of one-piece reinforced stainless steel to ensure durability.

- **Drawers**
  Small drawer holds up to 154 pounds.
  Large drawer holds up to 242 pounds.

- **Countertops**
  TCBE-52SDR supports up to 788 pounds of equipment.
  TCBE-82SDR & TCBE-96SDR support up to 1,192 pounds of equipment.

- **Durable Stainless Steel Drawers**
  Drawers are easy to clean and assemble.

- **Top Is Insulated to Eliminate Heat Transfer to the Interior of Cabinet**

- **Efficient Refrigeration System**
  Turbo Air's solid door refrigerators are designed with oversized and balanced (CFC Free R-134A) refrigeration systems. These include efficient evaporators and condensers for faster cooling and greater efficiency.

- **High-Density Polyurethane Insulation**
  The entire cabinet structure and solid doors are foamed-in-place using high density, CFC free polyurethane insulation.

- **Side Mount Compressor Unit**
  Through positioning the compressor to the side, the refrigerator can be serviced without being moved. By innovatively creating a front breathing feature, this model can provide high efficiency in narrow spaces.

- **Refrigerator Holds 33°F ~ 38°F for the Best in Food Preservation**

Model	Drawers	CU./FT.	HP	AMPS	Crated Weight (lbs.)	L x D x H* (inches)
TCBE-82SDR	4	19	1/3	6.2	469	83 5/8 x 32 x 20 1/2

Ver.201301

* Height does not include 5-7/8" for caster height.

Model : TCBE-82SDR

ELECTRICAL DATA	
Voltage	115/60/1
Plug Type	NEMA-5-15P
Full Load Amperes	6.2
Compressor HP	1/3
Cord Length ft.	9
Refrigerant	R-134A
DIMENSIONAL DATA	
Ext. Length Overall in.	83 5/8 (2124mm)
Ext. Depth Overall in.	32 (813mm)
Ext. Height Overall in.*	20 1/2 (521mm)
# of Drawers	4
# of Pans	60
Net Capacity cu. ft.	19
Gross Weight lbs.	469
Net Weight lbs.	412

Design and specifications subject to change without notice.
Actual shipping weight may differ due to extra packing materials for product protection.
* Height does not include 5-7/8" for caster height.

- **WARRANTY : 3 Year Parts and Labor Warranty**
  Additional 2 Year Warranty on Compressor

- Self-Contained System
- 5" Swivel Casters
- Legs Available for All Models (optional)

PLAN VIEW

(unit : inch)

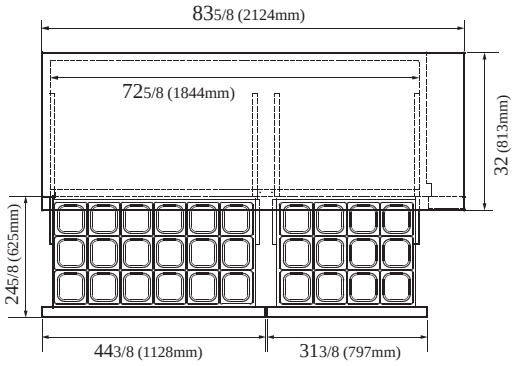

PLAN VIEW

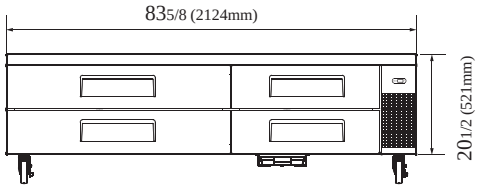

FRONT VIEW

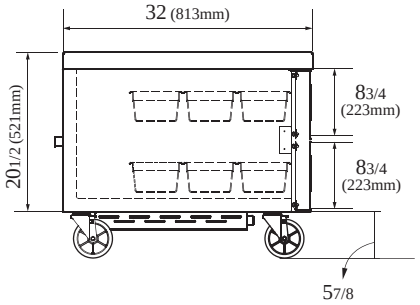

SIDE VIEW

Ver.201301