REFRIGERATOR MANUFACTURER
Turbo air
more durable,convenient,beautiful

1250 Victoria St
Carson, CA 90746
Tel. 310-900-1000
Fax. 310-900-1077
www.turboairinc.com

Project :	
Model # :	
Item # :	Qty :
Available W/H :	
Approval :	

Undercounter Refrigerator

Undercounters
M3 Series

Model : MUR-48

FEATURES / BENEFITS

Stainless Steel Cabinet Construction
The Turbo Air M3 model boasts a stainless steel exterior (galvanized steel back and bottom). Interior is stainless steel floor with AL sides and back. It guarantees the utmost in cleanliness and long product life. It can add a touch of style to the most refined setting.

Hot Gas Condensate System
Through Turbo Air's creative innovation, the condensate system surfaces have been specially treated to resist corrosion. This not only increases efficiency without the risk of refrigerant leakage from corrosion, but also prevents the overflow of condensate water.

Efficient Refrigeration System
M3's solid door refrigerators are designed with oversized and balanced (CFC Free R-134A) refrigeration systems. These include efficient evaporators and condensers for faster cooling and greater efficiency.

High-Density Polyurethane Insulation
The entire cabinet structure and solid doors are foamed-in-place using high density, CFC free polyurethane insulation.

Ergonomically Designed Doors
Customers' fatigue fades away with easy grip handles and doors that open effortlessly. These features along with self-closing doors make this the ultimate choice in customer convenience. ABS sheet door liners resist water condensation with thermal efficiency.

Adjustable, Heavy Duty, PE (Polyethylene) Coated Wire Shelves

Magnetic Door Gaskets
Magnetic door gaskets are of one piece construction, removable without tools for ease of cleaning and replacement.

Refrigerator Holds 33°F ~ 38°F for the Best in Food Preservation

Intertek NSF ISO9001 2 YEAR WARRANTY Compressor 5 YEAR WARRANTY (U.S.A only)

Model	Swing Door	CU./FT.	#of Shelves	HP	AMPS	Crated Weight (lbs.)	L x D* x H† (inches)
MUR-48	2	12	2	1/3	6.5	246	48 1/4 x 30 x 30 5/8

Ver.201301

*Depth does not include 1" for rear spacers. † Height does not include 5-7/8" for caster height.

Undercounter Refrigerator

Undercounters
M3 Series

Model : MUR-48

ELECTRICAL DATA	
Voltage	115/60/1
Plug Type	NEMA-5-15P
Full Load Amperes	6.5
Compressor HP	1/3
Cord Length ft.	9
Refrigerant	R-134A
DIMENSIONAL DATA	
Net Capacity cu. ft.	12
Ext. Length Overall in.	48 1/4 (1226mm)
Ext. Depth Overall in.*	30 (762mm)
Ext. Height Overall in.†	30 5/8 (777mm)
# of Doors	2
# of Shelves	2
Gross Weight lbs.	246
Net Weight lbs.	229

Design and specifications subject to change without notice.
Actual shipping weight may differ due to extra packing materials for product protection.
* Depth does not include 1" for rear spacers.
† Height does not include 5-7/8" for caster height.

- **WARRANTY : 2 Year Parts and Labor Warranty**
  Additional 3 Year Warranty on Compressor

- Self-Contained System
- 4" Swivel Casters
- 2.5" Dia. Casters Available (optional)
- Legs Available for All Models (optional)
- Stainless Steel Back Splash Available (optional)

- **OPTIONAL ACCESSORIES :**
  - ❑ 2.5" Diameter casters
  - ❑ 5" Diameter casters
  - ❑ 6" ABS plastic legs
  - ❑ Additional stainless steel shelves
  - ❑ Additional PE coated wire shelves
  - ❑ Stainless steel double over-shelf
  - ❑ Back splash guard

PLAN VIEW

(unit : inch)

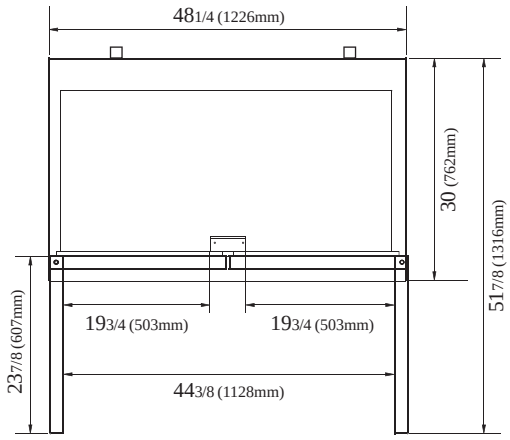

PLAN VIEW

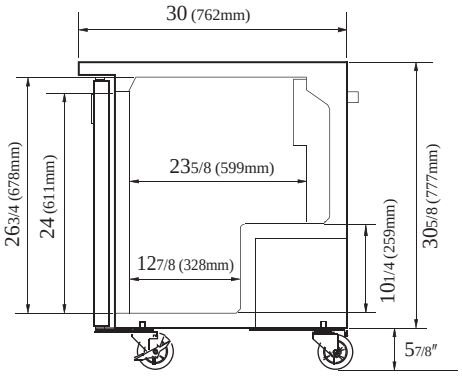

SIDE VIEW

Ver.201301

Intertek ISO9001 2 YEAR PARTS AND LABOR WARRANTY Compressor 5 YEAR WARRANTY (U.S.A only)

- **Turbo Air** : 800-627-0032
- **GK** : 800-500-3519
- **Warranty** : 800-381-7770
- **AC** : 888-900-1002

Turbo air REFRIGERATOR MANUFACTURER · GERMAN KNIFE · RADIANCE · GREEN WORLD · Turbo air AIR CONDITIONER MANUFACTURER