T&S BRASS AND BRONZE WORKS, INC.

2 Saddleback Cove / P.O. Box 1088
Travelers Rest, SC 29690

Travelers Rest, SC: 800-476-4103 Simi Valley, CA: 800-423-0150 Fax: 864-834-3518 www.tsbrass.com

REG. #A2601
ISO #9001

Model No.
B-0113

Item No.

This Space for Architect/Engineer Approval

Job Name_____Date_____

Model Specified_____ Quantity_____

Customer/Wholesaler_____

Contractor_____

Architect/Engineer_____

EPAct 2005 Compliant

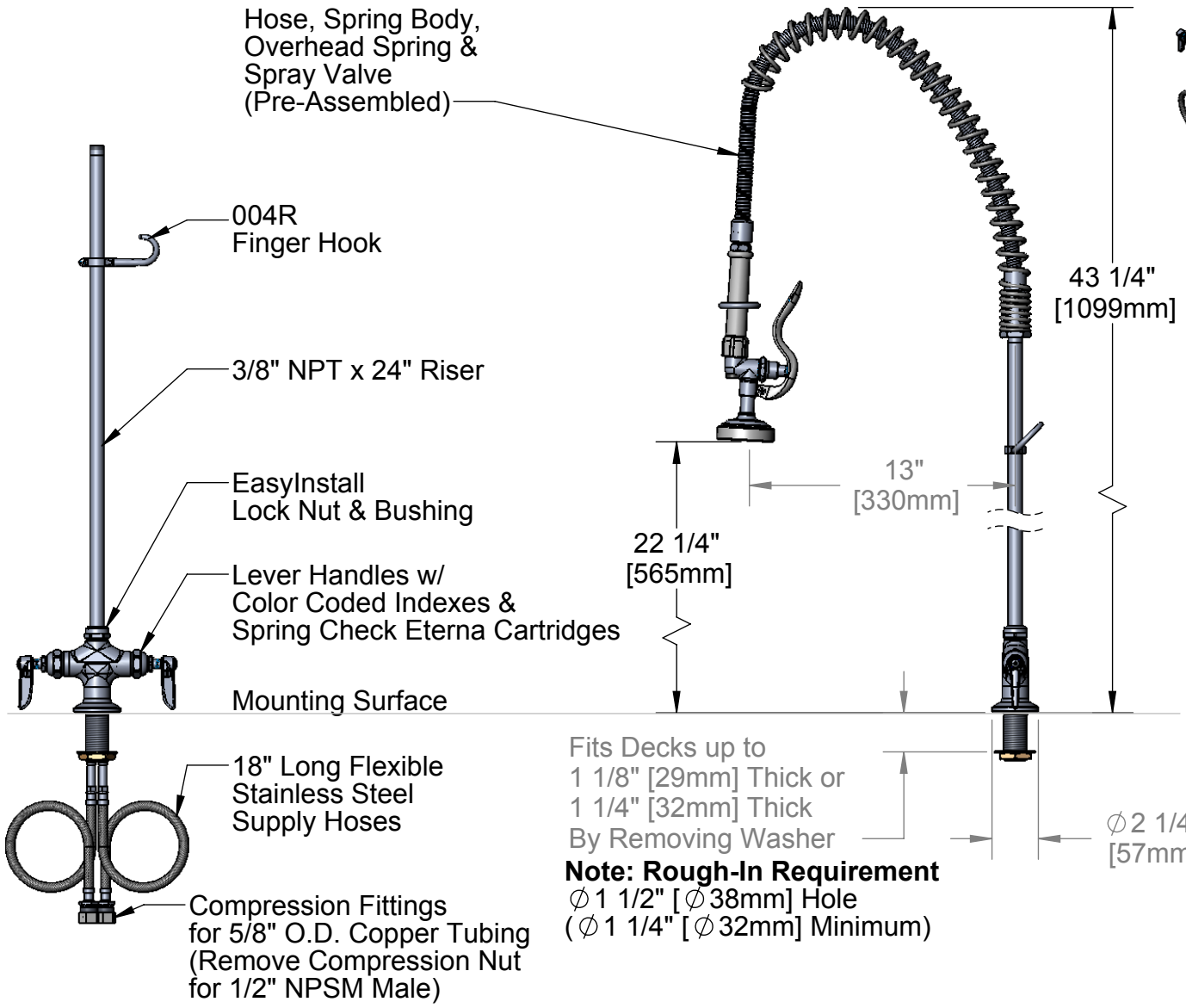

Product Specifications:

EasyInstall Pre-Rinse Unit:
Single Deck Mount Base Mixing Faucet, Flexible Supply Hoses, 24" Riser, Overhead Spring, 44" Flex Hose & B-0107 Spray Valve

Drawn	Checked	Approved
KJG	JRM	JHB
Scale: 1: 8		Date: 01/21/08

T&S BRASS AND BRONZE WORKS, INC.

2 Saddleback Cove / P.O. Box 1088
Travelers Rest, SC 29690

Travelers Rest, SC: 800-476-4103 Simi Valley, CA: 800-423-0150 Fax: 864-834-3518 www.tsbrass.com

REG. #A2601
ISO #9001

Model No.
B-0113

Item No.

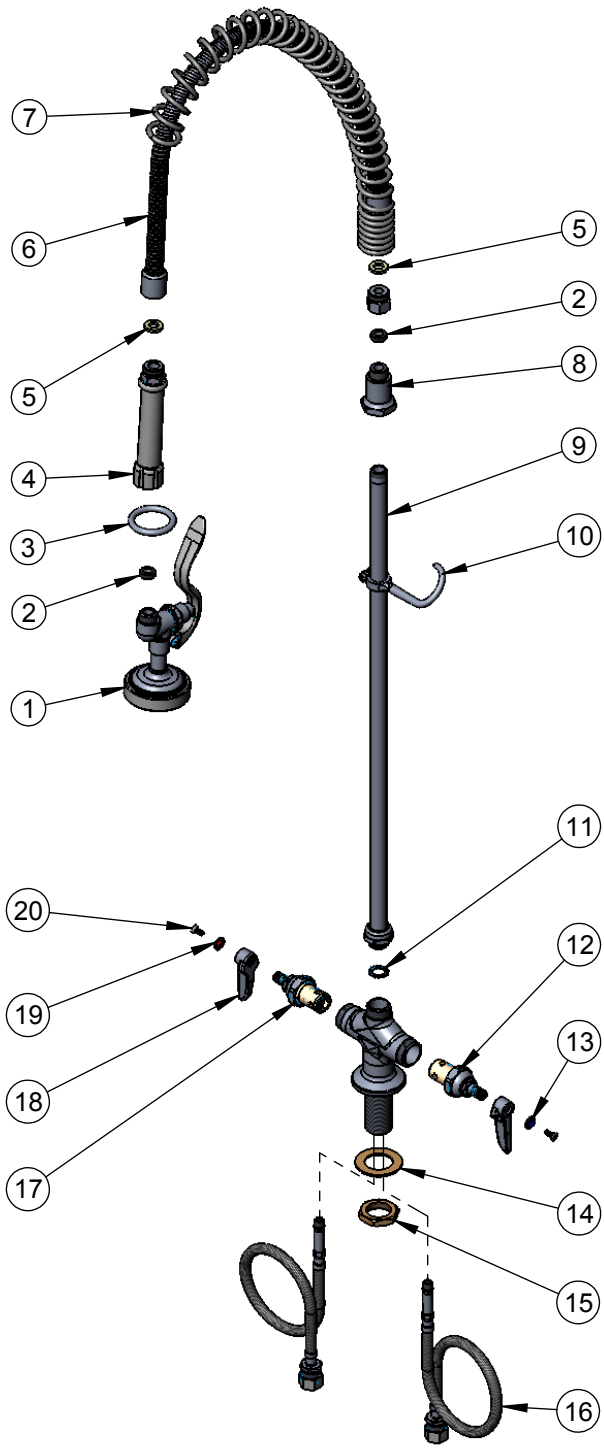

ITEM NO.	SALES NO.	DESCRIPTION
1	B-0107	Spray Valve Asm
2	010476-45	#27 Washer
3	000907-45	Spray Valve Hold Down Ring
4	002987-40	Grip Handle Assembly
5	010475-45	Washer, B-0100 Hose Barrel
6	B-0044-H2A	44" Flex Hose Assembly Less Handle
7	000888-45	EasyInstall Overhead Spring
8	000821-25	Spring Body
9	000372-40	3/8" NPT x 24" Long Riser
10	004R	Finger Hook Assembly
11	014200-45	Star Washer, Anti-Rotation
12	002711-40	Spindle Asm, Eterna Cold
13	001660-45	Blue Index-CW
14	007365-45	Lock Washer
15	000965-45	Lock Nut
16	012534-45	Flexible Connector Hose
17	002712-40	Spindle Asm, Eterna Hot
18	001638-45	Lever Handle
19	001661-45	Red Index-HW
20	000922-45	Lever Handle Screw

Product Specifications:

EasyInstall Pre-Rinse Unit:
Single Deck Mount Base Mixing Faucet, Flexible Supply Hoses, 24" Riser, Overhead Spring, 44" Flex Hose & B-0107 Spray Valve

Drawn	Checked	Approved
KJG	JRM	JHB
Scale: NTS		Date: 01/21/08