TRUE FOOD SERVICE EQUIPMENT, INC.
2001 East Terra Lane • O'Fallon, Missouri 63366-4434 • (636)240-2400
Fax (636)272-2408 • Toll Free (800)325-6152 • Intl Fax# (001)636-272-7546
Parts Dept. (800)424-TRUE • Parts Dept. Fax# (636)272-9471 • www.truemfg.com

Project Name: _____
Location: _____
Item #: _____ *Qty:* _____
Model #: _____

AIA #
SIS #

Model:
TDD-1

Underbar Refrigeration:
Solid Swing Door Direct Draw Beer Dispenser

*New Style Beer Column

TDD-1

- True's direct draw beer dispensers are designed with enduring quality and value. Our commitment to using the highest quality materials and oversized refrigeration assures colder product temperatures and years of trouble free service.
- Oversized, factory balanced, refrigeration system holds 33°F to 38°F (.5°C to 3.3°C).
- Exterior - heavy duty, wear resistant laminated black vinyl front and sides. Matching black aluminum back. All stainless steel counter top.
- Interior - Stainless steel floor with ½" (13 mm) reinforced lip and heavy gauge galvanized steel walls. NSF-7 approved for packaged and bottled product.
- One (1) 3" (77 mm) diameter stainless steel insulated beer column. Cold air is directed into beer column to reduce foaming and maximize draft beer profits.
- Anodized aluminum glass rail provides convenient storage for glasses on top.
- Entire cabinet structure and solid door are foamed-in-place using Ecomate. A high density, polyurethane insulation that has zero ozone depletion potential (ODP) and zero global warming potential (GWP).

*NOTE: Beginning in January of 2015, True Manufacturing will begin the process of changing the style on the insulated beer columns to a new angled look. There are no functional differences created by any of these changes, the difference is only in the appearance.

ROUGH-IN DATA

Specifications subject to change without notice.
Chart dimensions rounded up to the nearest ⅛" (millimeters rounded up to next whole number).

Model	Doors	Capacity ½ Barrels	Cabinet Dimensions (inches) (mm) L	D	H*	HP	Voltage	Amps	NEMA Config.	Cord Length (total ft.) (total m)	Crated Weight (lbs.) (kg)
TDD-1	1	1	23½ 597	31¼ 794	39¾ 1010	⅙ ⅛	115/60/1 230-240/50/1	3.9 1.2	5-15P ▲	7 2.13	205 93

* Height does not include 14¼" (362 mm) for draft arm.

▲Plug type varies by country.

MADE IN USA SINCE 1945 · 5 YEAR COMPRESSOR WARRANTY USA · c UL us · NSF · CE

3/15 Printed in U.S.A.

APPROVALS:

AVAILABLE AT:

Model:

TDD-1

Underbar Refrigeration:

Solid Swing Door Direct Draw Beer Dispenser

STANDARD FEATURES

DESIGN

- True's direct draw beer dispensers are designed with enduring quality and value. Our commitment to using the highest quality materials and oversized refrigeration assures colder product temperatures and years of trouble free service.

REFRIGERATION SYSTEM

- Factory engineered, self-contained, capillary tube system using environmentally friendly (CFC free) 134A refrigerant.
- Extra large evaporator coil balanced with higher horsepower compressor and large condenser; maintains cabinet temperatures of 33°F to 38°F (.5°C to 3.3°C).
- Sealed, cast iron, self-lubricating evaporator fan motor(s) and larger fan blades give True beer dispensers a more efficient low velocity, high volume airflow design. This unique design ensures faster temperature pull down of warm product, colder holding temperatures and faster recovery in high use situations.
- Condensing unit accessed from rear of unit for easy cleaning and maintenance.

CABINET CONSTRUCTION

- Exterior - heavy duty, wear resistant laminated black vinyl front and sides. Matching black aluminum back. All stainless steel counter top.
- Interior - Stainless steel floor with ½" (13 mm) reinforced lip and heavy gauge galvanized steel walls.
- Door threshold protector prevents damage to cabinet from routine loading of product.
- Insulation - entire cabinet structure and solid door are foamed-in-place using Ecomate. A high density, polyurethane insulation that has zero ozone depletion potential (ODP) and zero global warming potential (GWP).
- Cabinet fitted with 4" (102 mm) diameter castors (legs not available).
- One (1) 3" (77 mm) diameter stainless steel insulated beer column. Cold air is directed into beer column(s) to reduce foaming and maximize draft beer profits.
- Anodized aluminum glass rail.

DOOR

- Wear-resistant laminated black vinyl exterior with heavy gauge galvanized steel liner.
- Each door fitted with 12" (305 mm) long recessed handle that is foamed-in-place with a sheet metal interlock to ensure permanent attachment.
- Positive seal doors.
- Magnetic door gasket(s) of one piece construction, removable without tools for ease of cleaning.
- Door lock standard.

MODEL FEATURES

- Evaporator is epoxy coated to eliminate the potential of corrosion.
- Designed to accommodate all types of beer kegs.
- Listed under NSF-7 for the storage and/or display of packaged or bottled product.

ELECTRICAL

- Unit completely pre-wired at factory and ready for final connection to a 115/60/1 phase, 15 amp dedicated outlet. Cord and plug set included.

115/60/1
NEMA-5-15R

OPTIONAL FEATURES/ACCESSORIES

Upcharge and lead times may apply.

- ❑ 230 - 240V / 50 Hz.
- ❑ Double headed draft column.
- ❑ Triple headed draft column.
- ❑ Two-way tapper manifold.
- ❑ Draft cap.

PLAN VIEW

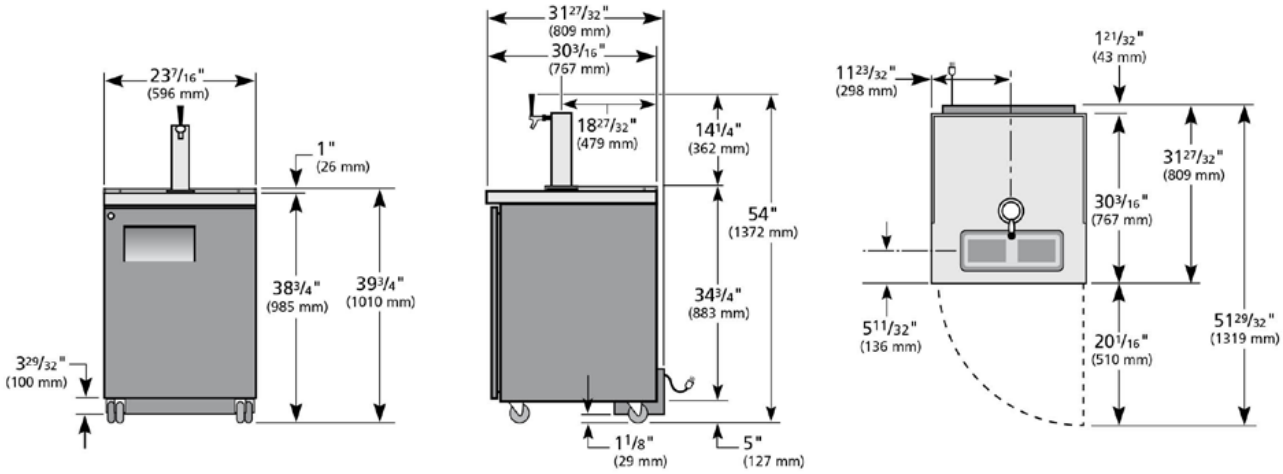

ELEVATION RIGHT VIEW PLAN VIEW

WARRANTY*
Three year warranty on all parts and labor and an additional 2 year warranty on compressor. (U.S.A. only)

*RESIDENTIAL APPLICATIONS: TRUE assumes no liability for parts or labor coverage for component failure or other damages resulting from installation in non-commercial or residential applications.

METRIC DIMENSIONS ROUNDED UP TO THE NEAREST WHOLE MILLIMETER

SPECIFICATIONS SUBJECT TO CHANGE WITHOUT NOTICE

Model	Elevation	Right	Plan	3D	Back
TDD-1	TFHY04E	TFHY04S	TFHY04P	TFHY043	

TRUE FOOD SERVICE EQUIPMENT

2001 East Terra Lane • O'Fallon, Missouri 63366-4434 • (636)240-2400 • Fax (636)272-2408 • Toll Free (800)325-6152 • Intl. Fax# (001)636-272-7546 • www.truemfg.com