Project	Quantity	Item #
Model Specified:		CSI Section 11400

Compact Undercounter Freezers/ Self-Contained

Left To Right Models ULT60-LR, ULT48-LR & ULT27-R
(shown with optional casters)

27", 48" & 60" Wide Models

ULT SERIES
Stainless Exterior, Anodized Aluminum Interior

27" Wide One Door Hinged Left Model	**ULT27-L**
27" Wide One Door Hinged Right Model	**ULT27-R**
48" Wide Two Door Model Hinged Left/Right	**ULT48-LR**
60" Wide Two Door Model Hinged Left/Right	**ULT60-LR**

Finally there is a compact undercounter product worthy of the Traulsen name. Their rugged construction and high quality components make these units capable of standing up to the demanding environment of any foodservice kitchen. Each unit is built with a high quality stainless steel exterior and durable anodized aluminum interior.

They are also designed for high performance, providing accurate temperature maintenance. Fresh, safe food is assured, even under the most demanding conditions.

Their front breathing design allows for "zero-clearance" installation. As a result they can be placed right up against the backwall and alongside other kitchen equipment, saving valuable floor space. Additionally, they offer a wide range of optional accessories to choose from, and are ideal for use with many different type applications.

Standard Product Features

- Stainless Steel Exterior Top, Sides & Door(s)
- Anodized Aluminum Interior
- Front Breathing Self-Contained Refrigeration System
- Environmentally Friendly R-404A Refrigerant
- Self-Closing Stainless Steel Door(s) With Stay Open Feature At 105 Degrees
- Horizontal Work Flow Door Handle
- Anodized Aluminum Interior Door Liner
- Interior Mounted Thermometer
- Two (2) Powder Coated Shelves Per Door, Mounted On Pilasters
- Automatic Non-Electric Condensate Evaporator
- Magnetic Snap-In Door Gasket(s)
- 8' Cord & Plug Attached
- Set of Four (4) 6" High Adjustable Legs (6 for model ULT60)
- One Year Parts And Labor Warranty
- Five Year Compressor Warranty

Options & Accessories

- 22 Gauge Stainless Steel Worktop With 4" High Backsplash
- Stainless Steel Finished Back
- Additional Powder Coated Shelves
- 6" Overall Height Casters (for use in lieu of legs)
- 4" Overall Height Casters (for use in lieu of legs)
- 3-1/2" Overall Height Casters (for use in lieu of legs)
- 2-1/2" Overall Height Casters (for use in lieu of legs, 27" models only)
- Two Year Service/Labor Warranty Available

c UL us LISTED

NSF

Listed by Underwriters Laboratories Inc., to U.S. and Canadian safety standards and and NSF International in accordance with ANSI/NSF7.

Approval: _____

Project	Quantity	Item #
Model Specified:		CSI Section 11400

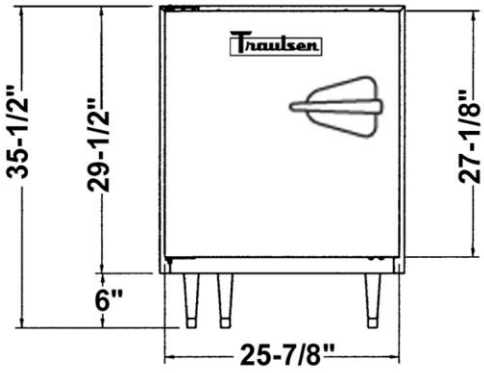

Elevation - ULT27

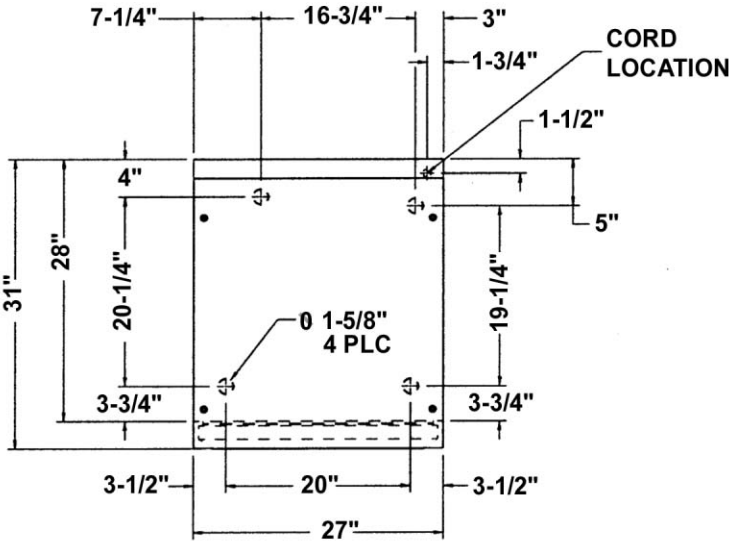

Plan - ULT27

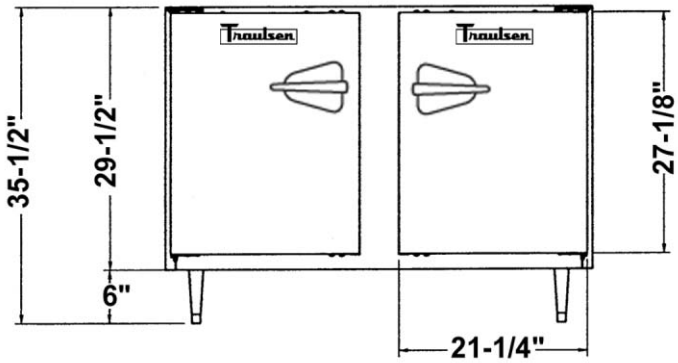

Elevation - ULT48

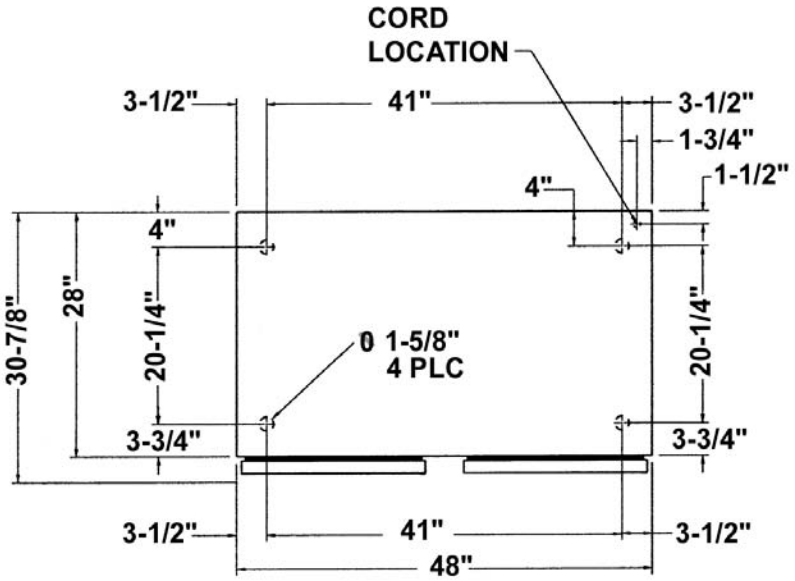

Plan - ULT48

TRAULSEN
4401 BLUE MOUND RD.
PHONE 1 (800) 825-8220
Website: www.traulsen.com
FT. WORTH, TX 76106
FAX-MKTG. 1 (817) 624-4302

Project	Quantity	Item #
Model Specified:		CSI Section 11400

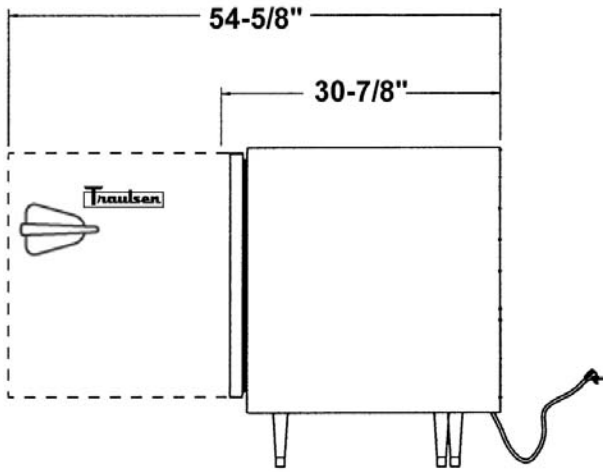

Section - 27" & 60" Models

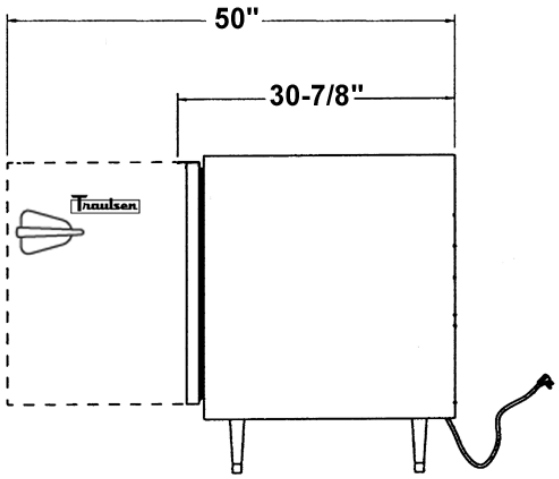

Section - 48" Models

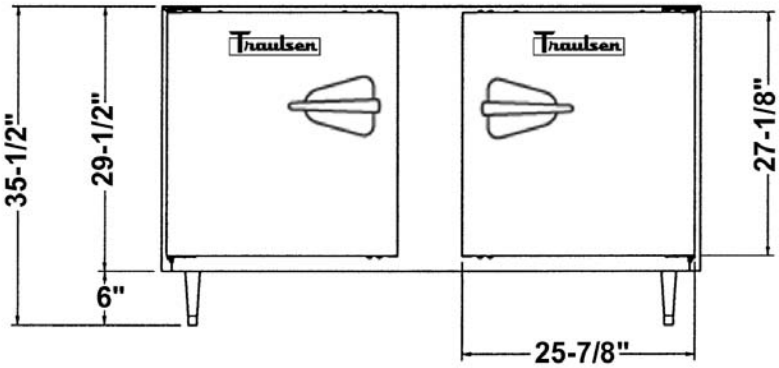

Elevation - ULT60

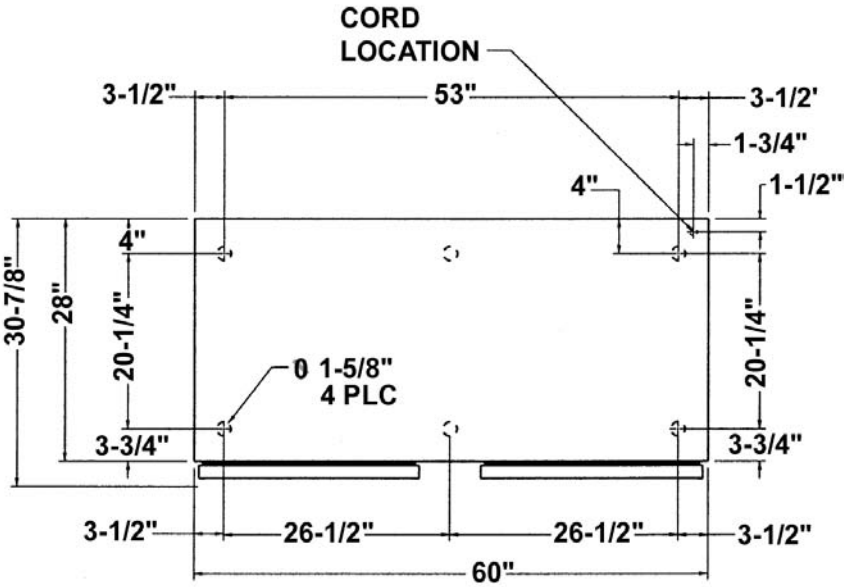

Plan - ULT60

Project	Quantity	Item #
Model Specified:		CSI Section 11400

Specifications

Construction, Hardware and Insulation
Cabinet exterior front, one piece sides, and doors are constructed of 22 gauge stainless steel. Cabinet interior and door liners are constructed of anodized aluminum. The exterior cabinet back and bottom are constructed of galvanized steel.

A stainless steel door with a recessed work-flow handle and anodized aluminum liner is provided. The door self closes at less than 90 degrees and also includes a stay open feature at 105 degrees. Easily removable for cleaning, vinyl magnetic door gasket assures tight door seal.

Both the cabinet and door(s) are insulated with an average of 2 " thick high density, non-CFC, foamed in place polyurethane.

Refrigeration System
A balanced, rear mounted, front breathing, self-contained refrigeration system using R-404A refrigerant is provided. It features a capillary tube metering device, air-cooled hermetic compressor, a forced air evaporator coil and a non-electric condensate evaporator. An 8' cord and plug is provided. Standard operating temperature is 0 to -5°F.

Interior
Standard interior arrangements include two (2) powder coated wire shelves per door mounted on pilasters. These are adjustable in 1/2" increments, allowing for a minimum of 1-1/2" spacing between shelves.

Warranties
Both a one year parts and labor warranty and a five year compressor warranty (self-contained models only) are provided standard. An optional 2nd year extended parts and labor warranty is also available.

DIMENSIONAL DATA	ULT27	ULT48	ULT60
Net capacity cu. ft.	7.1	13.1	16.7
Length - overall in.	27	48	60
Depth - overall in.	30⅞[1]	30⅞	30⅞
Depth - with door open 90°	54⅝[1]	50	54⅜
Clear door height in.	24⅛	24⅛	24⅛
Clear door width in.	22¾	18¼	22¾
Height - overall on 6" legs in.	35½	35½	35½
Number of shelves - total	2	4	4
Shelf area sq. ft.	4.88	10.3	13.2
ELECTRICAL DATA			
Voltage	115/60/1	115/60/1	115/60/1
Full Load Amperes	6.3	7.7	8.7
Wattage	510	603	730
REFRIGERATION DATA			
Refrigerant	R-404A	R-404A	R-404A
BTU/HR - H.P.[2]	1450 (⅓ HP)	1610 (⅓ HP)	2160 (½ HP)
SHIPPING DATA			
Length - Crated in.	44	63½	75½
Depth - Crated in.	44¼	44¼	44¼
Height - Crated in.	46¾	46¾	46¾
Volume - Crated cu. ft.	53	76	90
Net Wt. lbs.	260	275	365
Gross Wt. lbs.	285	300	390

NOTES
1= Figure does not include additional 1" required for rear clearance bumper.
2= Based on a 90 degree F ambient and -20 degree F evaporator.

Equipped With One NEMA 5-15 P Plug

NOTE: When ordering please specify: Voltage, Hinging, Optional Accessories and any additional warranties.

Continued product development may necessitate specification changes without notice.
Part No. TR35820 (revised 1/07)

TRAULSEN
4401 BLUE MOUND RD.
PHONE 1 (800) 825-8220
Website: www.traulsen.com
FT. WORTH, TX 76106
FAX-MKTG. 1 (817) 624-4302