PRO-MAX® GROOVED TWO-SIDED GRILLS WITH PRO-LIFT™ HINGE

Models CG10IB, CG14B, CG14IB, CG14IGTB, CG28IB & CG28IGTB

Features/Benefits

- ★ Expand your menu with Star's Pro-Max two sided grill. Prepare "Panini" sandwiches, chicken breasts, hamburgers, steaks, wraps vegetables and many other menu items quickly and easily while maximizing space.
- ★ Available in 10", 14" and 28" width platens to fit a variety of foodservice operations.
- ★ Heavy-duty cast iron or aluminum platens provide long life and superior performance for high volume operations.
- ★ The Star Pro-Lift hinge system provides for unmatched reliability with safe and effortless operation. The top platens lift parallel to the bottom platen for a full three (3) inches before rotating up so that thin tortillas or tall sandwiches and burritos cook evenly.
- ★ Spacious grilling height accommodates product up to 3" with 3-4 pounds of pressure for proper cooking between platens.
- ★ Two-sided cooking heats your menu items in half the time, sealing in the flavor.
- ★ The bottom platen has a patented splash guard to help keep products and grease in their place.
- ★ Ergonomically designed control panel provides easy access and visability to controls and grease drawer.
- ★ Heavy gauge, water resistant flexible plastic conduit protects electrical connections.
- ★ Thermostat is rated from 175°F (79°C) to 550°F (302°C) and provides accurate sensing of temperature.
- ★ Removable, large capacity grease drawer in the front of unit for easy clean up.

Model CG14B

Model CG14B

Application:

Star's Two-Sided Grills can prepare sandwiches, chicken breasts, wraps, hamburgers and a variety of other menu items in your restaurant, cafe, concession stand, bar, or wherever you need high performance cooking. Grills are compact and portable providing flexibility in your operation.

Quality Construction:

Star's Two-Sided Grills are constructed of 18 gauge stainless steel. Units available with cast iron or aluminum grooved platens. The Pro-Lift™ Hinge System is constructed of hardened aluminum for strength and durability. Metal tubular elements are standard. The lead-in cord is resistant to water and oil and has metallic braiding to protect wiring. Furnished with a 6' cord and standard NEMA plug.

Warranty:

Star's Two-Sided Grills are covered by Star's one year parts and labor warranty.

Patent No. 6,257,126

KITCHEN INNOVATIONS 2011 AWARD
NATIONAL RESTAURANT ASSOCIATION RESTAURANT, HOTEL-MOTEL SHOW

Kitchen Innovations 2011 Award presented by the National Restaurant Association Restaurant, Hotel-Motel Show

c UL us LISTED

CLASSIFIED UL EPH

CE

QUALITY MANAGEMENT SYSTEM STAR CERTIFICATION ISO 9001:2000

Star Manufacturing International Inc. - 10 Sunnen Drive - P.O. Box 430129 - St. Louis, MO 63143-3800
Phone: (800) 264-7827 - FAX: (800) 264-6666 - www.star-mfg.com

Ace Mart Restaurant Supply

Star Manufacturing International, Inc.

Pro-Max® Grooved Two-Sided Grills

PRO-MAX® GROOVED TWO-SIDED GRILLS WITH PRO-LIFT™ HINGE

Models CG10IB, CG14B, CG14IB, CG14IGTB, CG28IB & CG28IGTB

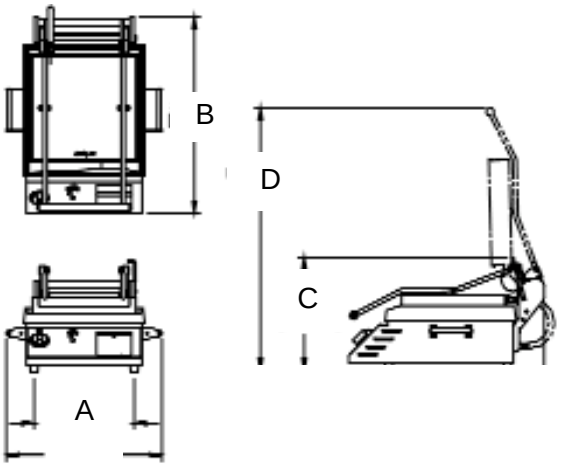

Model and Specifications

Model No.	Grid Surface	(A) Width (cm)	(B) Depth (cm)	Height (C) Closed (cm)	Height (D) Open (cm)	Voltage	Wattage	Amps	NEMA	Approximate Weight Shipping (kg)	Approximate Weight Installed (kg)
CG10IB	Iron	16-1/8” (40.9)	21-1/8” (53.7)	14-1/4” (36.2)	28-3/4” (73)	120 120 208/240	1800 1800 1350/1800	15 15 6.5/7.5	5-15P 5-20P* 6-15P	67 lbs. (30.4)	57 lbs. (28.1)
CG14B	Alum.	19-5/8” (49.8)	24-5/8” (62.5)	14-1/4” (36.2)	33” (83.8)	120 120 208/240	1800 1800 1350/1800	15 15 6.5/7.5	5-15P 5-20P* 6-15P	67 lbs. (29.5)	55 lbs. (24.9)
CG14IB	Iron	19-5/8” (49.8)	24-5/8” (62.5)	17-1/4” (43.8)	36” (91.4)	208/240	2700/2600	13/15	6-15P	67lbs. (29.5)	55 lbs. (24.9)
CG14IGTB Grooved Top Only	Iron	19-5/8” (49.8)	24-5/8” (62.5)	17-1/4” (43.8)	36-1/2” (92.7)	208/240	2700/3600	13/15	6-15P	67 lbs. (29.5)	55 lbs. (24.9)
CG28IB	Iron	31-1/4” (87)	24-5/8” (62.5)	17-1/4” (43.8)	36” (91.4)	208/240 208/240	5400/7200 5400/7200	26/30 26/30	L6-30P 6-50P*	206 lbs. (93.4)	171 lbs. (77.5)
CG28IGTB Grooved Top Only	Iron	31-1/4” (87)	24-5/8” (62.5)	17-1/4” (43.8)	36” (91.4)	208/240 208/240	5400/7200 5400/7200	26/30 26/30	L6-30P 6-50P*	206 lbs. (93.4)	171 lbs. (77.5)

*Canadian Requirement

Note: Units weighing more than 80 pounds have standard 4” legs.

Typical Specifications

Two-Sided Grills are constructed with an 18 gauge stainless steel body. Cast iron or aluminum grooved platens are standard. The Pro-Lift™ Hinge System provides easy operation for the top platen. Grilling height between platens is up to 3" with the Pro-Lift™ Hinge System providing 3-4 pounds of pressure to the cooking product placed on bottom platen. Metal sheathed tubular elements shall be provided as standard. Adjustable non-skid feet shall be standard. Unit shall be provided with pilot light, six foot power cord with Nema rated plug (see specifications above). Units carry approval of UL, UL Sanitation or UL Canada Standards. Printed in the U.S.A.

Due to periodic changes in designs, methods, procedures, policies and regulations, the specifications contained in this sheet are subject to change without notice. While Star Manufacturing exercises good faith efforts to provide information that is accurate, we are not responsible for errors or omissions in information provided or conclusions reached as a result of using the specifications. By using the information provided, the user assumes all risks in connection with such use.

Star Manufacturing International Inc. - 10 Sunnen Drive - P.O. Box 430129 - St. Louis, MO 63143-3800
Phone: (800) 264-7827 - FAX: (800) 264-6666 - www.star-mfg.com