Scotsman™

PRODIGY™ smart thinking

C0530 – 500 lb Cube Ice Machine

Prodigy™ Modular Cube Ice Maker

Shown on B530S bin.

Features

Prodigy™ cubers use significantly less energy and water than other cube ice machines, exceeding pending California and Federal energy efficiency regulations.

Auto-Alert™ indicator lights constantly communicate about operating status and actually signal your staff when it's time to descale, sanitize, and more—making upkeep practically foolproof.

The patented WaterSense™ adaptive purge control delivers maximum reliability by reducing scale buildup for a longer time between cleanings.

Preventative maintenance is simpler than ever with easily-removed panels allowing clear access to internal components and a diagnostic code display insuring the right fix the first time. Reusable air filter is easily removable from the outside.

All external panel components are crafted for optimal aesthetic appeal through superior fit and finish.

An optional advanced feature SmartBoard™ provides NAFEM data protocol and additional operational data that can be displayed on-screen or transmitted remotely, resulting in early alert and fast diagnosis of operating issues.

An optional Vari-Smart™ ultrasonic ice level control sensor allows you flexibility to program ice levels, for up to 7 days, keeping just the right amount of freshly made ice in the bin.

24 Hour Volume Production

Air Cooled			Remote			Water Cooled		
70˚F/21˚C 50˚F/10˚C lb/kg	Air Water	ARI 90˚F/32˚C 70˚F/21˚C lb/kg	70˚F/21˚C 50˚F/10˚C lb/kg	Air Water	ARI 90˚F/32˚C 70˚F/21˚C lb/kg	70˚F/21˚C 50˚F/10˚C lb/kg	Air Water	ARI 90˚F/32˚C 70˚F/21˚C lb/kg
562/255		400/182	511/232		460/209	595/270		480/218

Modular Bin Options

Model Number	Dimensions W" x D" x H"	ARI Certified Bin Capacity lb/kg	Application Capacity lb/kg	Finish	Ship Weight lb/kg
B330P	30 x 34 x 30	270/123	344/156	Poly	130/59
B530S or P	30 x 34 x 44	420/191	536/244	SS or Poly	150/68

Bin: B330P

Bin: B530P

Cube Ice

Small Cube
⅞" x ⅞" x ⅜"
(2.22 x 2.22 x .95 cm)

Medium Cube
⅞" x ⅞" x ⅞"
(2.22 x 2.22 x 2.22 cm)

Common ice form, ideal for mixed drinks.

Warranty

- 3 years parts and labor on all components.
- 5 years parts and labor on the evaporator.
- 5 years parts on the compressor and condenser.

Warranty valid in North, South & Central America.
Contact factory for warranty in other regions.

Scotsman Ice Systems
775 Corporate Woods Parkway
Vernon Hills, IL 60061

1-800-SCOTSMAN
Fax: 847-913-9844
E-mail: customer.service@scotsman-ice.com

www.scotsman-ice.com

Enodis

C0530 – 500 lb Cube Ice Machine

Scotsman™

The Smart Choice in Ice.™

C0530 – 500 lb Cube Ice Machine

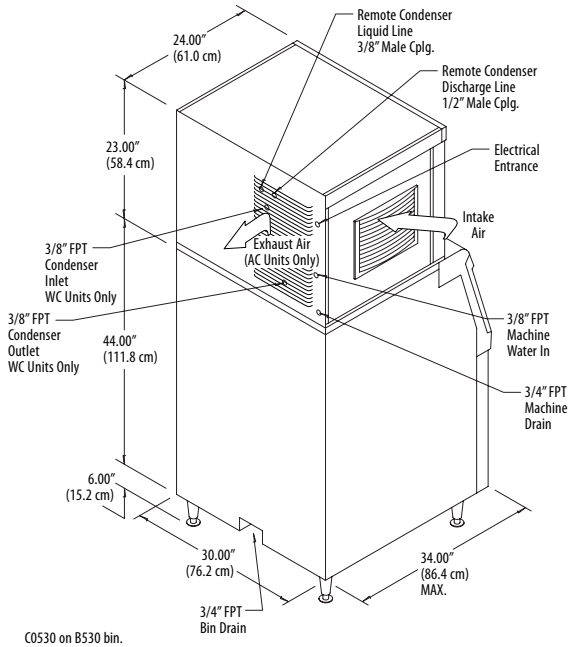

C0530 on B530 bin.

Installation Note: Allow 6" space at left, back and right side for ventilation and utility connections.

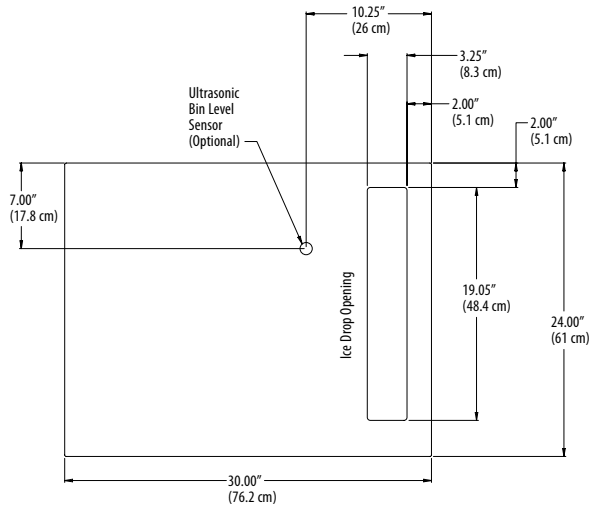

30" Prodigy plan view.

Specifications

	Model Number* Cube Size: medium or small	Condenser Unit	Basic Electrical Volts/Hz/Phase	Max. Fuse Size or HACR Circuit Breaker (amps)	Circuit Wires	Min. Circuit Ampacity	Energy Consumption kWh/100 lb (45.4 kg) 90˚F(32˚C)/70˚F(21˚C)	Water Usage Gallons/100 lb (liters/45.4 kg) Potable 90˚F(32˚C)/70˚F(21˚C)	Water Usage Gallons/100 lb (liters/45.4 kg) Condenser 90˚F(32˚C)/70˚F(21˚C)
med.	C0530MA-1A	Air	115/60/1	15	2	13.8	6.0	18.8/71.3	-
	C0530MR-1A	Remote	115/60/1	15	2	14.9	6.3	18.2/69.0	-
	C0530MW-1A	Water	115/60/1	15	2	12.2	4.7	18.4/69.8	160.0/606.7
sm.	C0530SA-1A	Air	115/60/1	15	2	13.8	6.0	18.8/71.3	-
	C0530SR-1A	Remote	115/60/1	15	2	14.9	6.3	18.2/69.0	-
	C0530SW-1A	Water	115/60/1	15	2	12.2	4.7	18.4/69.8	160.0/606.7

* 208-230/60/1 Voltage - Substitute "-32" in place of "-1", i.e. C0530SA-32A.

All Models

Dimensions (W x D x H):

Unit:
30" x 24" x 23"
(76.2 x 61.0 x 58.4 cm)

Shipping Carton:
33.5" x 27.5" x 28"
(85.1 x 69.9 x 71.1 cm)

Shipping Weight:
175 lb / 80 kg

BTUs per hour:
7,900

Accessories

Model Number	Description
KVS	Vari-Smart™ Ice Level Control - Program ice bin levels to match ice needs.
KSB	Smart-Board™ Advanced Control - Use additional operational data for fast diagnosis.
KSB-N	Smart-Board™ Advanced Control with Network - Network capable.
ERC111-1A	Remote Condenser for C0530xR, 115/60/1 - Consult Remote Condenser Spec Sheet for details.
RTE10	Line set, Precharged, R-404A, 10ft.
RTE25	Line set, Precharged, R-404A, 25ft.
RTE40	Line set, Precharged, R-404A, 40ft.
RTE75	Line set, Precharged, R-404A, 75ft.

* Scotsman recommends all ice machines have water filtration. See Scotsman Sanitation Matrix for details.

Operating Requirements

	Minimum	Maximum
Air Temperatures	50°F (10°C)	100°F (38°C)
Water Temperatures	40°F (4.4°C)	100°F (38°C)
Remote Cond. Temps	-20°F (-29°C)	120°F (49°C)
Water Pressures	20 PSIG (1.4 bar)	80 PSIG (5.5 bar)
Electrical Voltage	-10%	+10%

Specifications and design are subject to change without notice.

Scotsman Ice Systems
775 Corporate Woods Parkway
Vernon Hills, IL 60061

1-800-SCOTSMAN
Fax: 847-913-9844
E-mail: customer.service@scotsman-ice.com

www.scotsman-ice.com

Enodis

© 2007 Scotsman Ice Systems.

Scotsman

B222S, B322S, B330P, B530P/S, B842S, B948S – Storage Bins

B222S, B322S, B330P, B530P/S, B842S, B948S - Storage Bins

Modular Storage Bins

B530S shown with optional KLP8S legs

Features

New sleek, contemporary styling. A perfect match to Prodigy cube ice machines and other Scotsman ice machines.

Convenient, built-in scoop holder.

Easily removable baffle, no tools required for cleaning.

Unique recessed drain fitting for maximum installation flexibility.

Spring loaded door with hidden hinges for easy opening and closing.

Available in stainless steel or durable rotocast plastic.

ARI, NSF approved.

Storage Capacity

B222S		B322S		B330P	
APPLICATION	ARI	APPLICATION	ARI	APPLICATION	ARI
242/110	190/86	370/168	290/132	344/156	270/123

B530P/S		B842S		B948S	
APPLICATION	ARI	APPLICATION	ARI	APPLICATION	ARI
536/244	420/191	778/353	610/277	893/406	700/319

ARI PERFORMANCE CERTIFIED ™ ARI Standard 820 Ice Storage Bin www.aridirectory.org

NSF

Polyurethane Insulation

Foam insulation is forced between the wall and liner under heat and pressure to form a perfect wall to wall bond, preserving ice supply for long periods.

Bin Interior

The polyethylene bin interior is sanitary and easy to clean. Resists scratches and scuffs from ice scoops.

Warranty

- 3 years parts and labor on all components.

Warranty valid in North, South & Central America. Contact factory for warranty in other regions.

Scotsman Ice Systems
775 Corporate Woods Parkway
Vernon Hills, IL 60061

1-800-SCOTSMAN
Fax: 847-913-9844
E-mail: customer.service@scotsman-ice.com

www.scotsman-ice.com

Enodis

Scotsman
The Smart Choice in Ice.™

B222S, B322S, B330P, B530P/S, B842S, B948S - Storage Bins

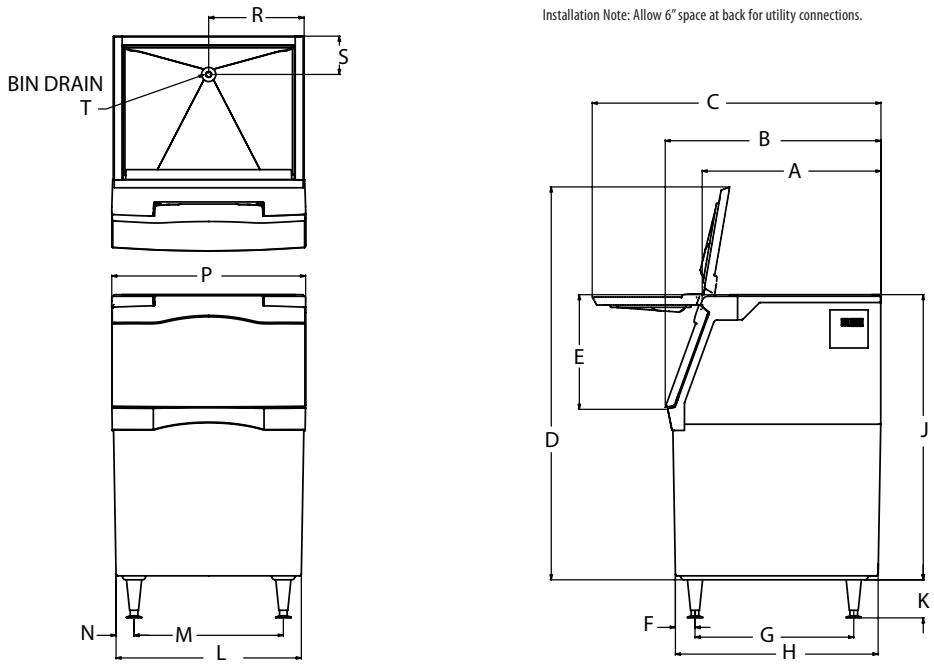

Installation Note: Allow 6" space at back for utility connections.

Dimensions

Model #	A	B	C	D	E	F	G	H	J	K	L	M	N	P	R	S	T
B222S	28.23	34	45.5	47.24	18	3.88	25	32.75	31	6	22	15.5	3.25	22.5	11	6	.75 NPT
B322S	28.23	34	45.5	61.24	18	3.88	25	32.75	44	6	22	15.5	3.25	22.5	11	6	.75 NPT
B330P	28.15	34	45.5	47.24	18	3.33	25	32.42	31	6	30	23.5	3.08	30.5	15	6	.75 NPT
B530P/S	28.15	34	45.5	61.24	18	3.09	25	31.93	45	6	30	23.5	2.83	30.5	15	6	.75 NPT
B842S	28.07	34	45.5	61.87	18	3.88	25	32.75	44	6	42	35.5	3.25	42.5	21	6	.75 NPT
B948S	28.05	34	45.5	61.24	18	3.88	25	32.75	44	6	48	41.5	3.25	48.5	24	6	.75 NPT

Finish: S = Stainless Steel, P = Poly

Shipping

Model #	Carton	Weight
B222S	24" x 36" x 35"	120
B322S	24" x 36" x 47"	140
B330P	32" x 36" x 33"	90
B530P/S	32" x 36" x 47"	110 / 150
B842S	44" x 36" x 47"	185
B948S	50" x 36" x 47"	220

Accessories

Model #	Description
KBC1	Kit, Bin Casters for B530S, B842S, B948S & SB380.* Not for use with B222S, B322S or SB480 when using extensions.
KBC1P	Kit, Bin Casters for B330P & B530P.*
KLP7	Kit, Legs, 6", Flanged Feet, For B Bins, HD Dispensers, AFE, CU1/2/3 & NSE.
KLP8S	Kit, legs, 6", Stainless Steel, For B Bins, HD Dispensers, AFE, CU1/2/3 & NSE.
BGS10	Bagger, Hooks on Any Bin.
KBAG	Kit, Bags, 1000, For BGS10.
KSEALER	Kit, Tape Sealer, For BGS10.
KTAPE	Kit, Tape, 180 ft. Roll, For BGS10.
KHOLDER	Kit, Scoop Holder, Stainless Steel.

* 3.5" Diameter, 2 Locking, Raises Bin 4.5".

Operating Requirements

	Minimum	Maximum
Air Temperatures	50°F (10°C)	100°F (38°C)
Water Temperatures	40°F (4.4°C)	100°F (38°C)
Remote Cond. Temps	-20°F (-29°C)	120°F (49°C)
Water Pressures	20 PSIG (1.4 bar)	80 PSIG (5.5 bar)
Electrical Voltage	-10%	+10%

Specifications and design are subject to change without notice.

Scotsman Ice Systems
775 Corporate Woods Parkway
Vernon Hills, IL 60061

1-800-SCOTSMAN
Fax: 847-913-9844
E-mail: customer.service@scotsman-ice.com

www.scotsman-ice.com

Enodis

© 2008 Scotsman Ice Systems.