Scotsman®

PRODIGY® smart thinking

C0330 – 300 lb Cube Ice Machine

C0330 – 300 lb Cube Ice Machine

Prodigy® Modular Cube Ice Maker

Shown on B530S bin with optional KLP8S legs.

Features

Prodigy® cubers use significantly less energy and water than other cube ice machines, exceeding California and Federal energy efficiency regulations.

AutoAlert™ indicator lights constantly communicate about operating status and actually signal your staff when it's time to descale, sanitize, and more—making upkeep practically foolproof.

The patented WaterSense adaptive purge control delivers maximum reliability by reducing scale buildup for a longer time between cleanings.

Preventative maintenance is simpler than ever with easily-removed panels allowing clear access to internal components and a diagnostic code display insuring the right fix the first time. Reusable air filter is easily removable from the outside.

All external panel components are crafted for optimal aesthetic appeal through superior fit and finish.

An optional advanced feature Smart-Board™ provides NAFEM data protocol and additional operational data that can be displayed on-screen or transmitted remotely, resulting in early alert and fast diagnosis of operating issues.

An optional Vari-Smart™ ultrasonic ice level control sensor allows you flexibility to program ice levels, for up to 7 days, keeping just the right amount of freshly made ice in the bin.

24 Hour Volume Production

Air Cooled		
70˚F/21˚C 50˚F/10˚C lb/kg	Air Water	ARI 90˚F/32˚C 70˚F/21˚C lb/kg
350/159		280/127

Water Cooled		
70˚F/21˚C 50˚F/10˚C lb/kg	Air Water	ARI 90˚F/32˚C 70˚F/21˚C lb/kg
400/182		280/127

Modular Bin Options

Model Number	Dimensions W" x D" x H"	ARI Certified Bin Capacity lb/kg	Application Capacity lb/kg	Finish	Ship Weight lb/kg
B330P	30 x 34 x 30	270/123	344/156	Poly	130/59
B530S or P	30 x 34 x 44	420/191	536/244	SS or Poly	150/68

Bin: B330P

Bin: B530P

Cube Ice

Small Cube
⅞" x ⅞" x ⅜"
(2.22 x 2.22 x .95 cm)

Medium Cube
⅞" x ⅞" x ⅞"
(2.22 x 2.22 x 2.22 cm)

Common ice form, ideal for mixed drinks.

Warranty

- 3 years parts and labor on all components.
- 5 years parts and labor on the evaporator.
- 5 years parts on the compressor and condenser.

Warranty valid in North, South & Central America.
Contact factory for warranty in other regions.

Scotsman Ice Systems
775 Corporate Woods Parkway
Vernon Hills, IL 60061

1-800-SCOTSMAN
Fax: 847-913-9844
E-mail: customer.service@scotsman-ice.com

www.scotsman-ice.com

Ace Mart Restaurant Supply

Scotsman®

The smart choice in ice.™

C0330 – 300 lb Cube Ice Machine

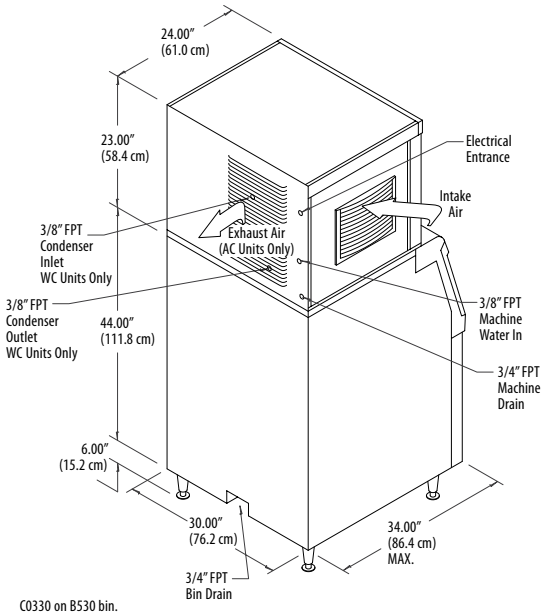

C0330 on B530 bin.

Installation Note: Allow 6" space at left, back and right side for ventilation and utility connections.

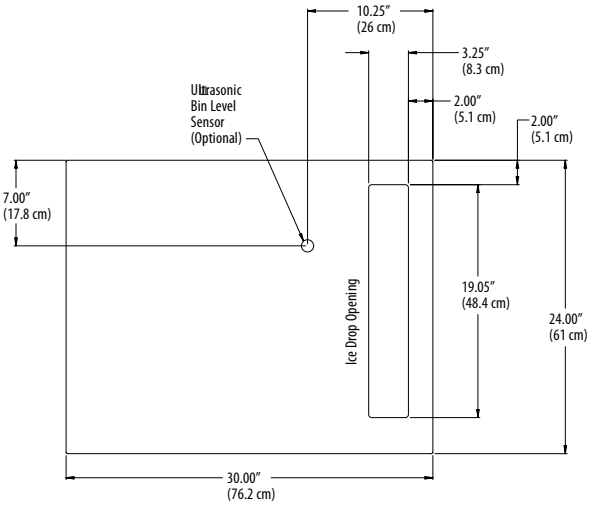

30" Prodigy plan view.

Specifications

Model Number* Cube Size: medium or small	Condenser Unit	Basic Electrical Volts/Hz/Phase	Max. Fuse Size or HACR Circuit Breaker (amps)	Circuit Wires	Min. Circuit Ampacity	Energy Consumption kWh/100 lb (45.4 kg) 90˚F(32˚C)/70˚F(21˚C)	Water Usage Gallons/100 lb (liters/45.4 kg) Potable 90˚F(32˚C)/ 70˚F(21˚C)	Water Usage Gallons/100 lb (liters/45.4 kg) Condenser 90˚F(32˚C)/ 70˚F(21˚C)
med. C0330MA-1A	Air	115/60/1	15	2	12.7	6.0	19.0/72.0	-
C0330MW-1A	Water	115/60/1	15	2	11.9	5.2	18.5/70.2	163.0/618.0
sm. C0330SA-1A	Air	115/60/1	15	2	12.7	6.0	19.0/72.0	-
C0330SW-1A	Water	115/60/1	15	2	11.9	5.2	18.5/70.2	163.0/618.0

* 208-230/60/1 Voltage - Substitute "-32" in place of "-1", i.e. C0330SA-32A. = ENERGY STAR®

All Models

Dimensions (W x D x H):

Unit:

30" x 24" x 23"
(76.2 x 61.0 x 58.4 cm)

Shipping Carton:

33.5" x 27.5" x 28"
(85.1 x 69.9 x 71.1 cm)

Shipping Weight:

160 lb / 73 kg

BTUs per hour:

5,200

Accessories

Model Number	Description
KVS	Vari-Smart™ Ice Level Control - Program ice bin levels to match ice needs.
KSB	Smart-Board™ Advanced Control - Use additional operational data for fast diagnosis.
KSB-N	Smart-Board™ Advanced Control with Network - Network capable.

* Scotsman recommends all ice machines have water filtration. See Scotsman Sanitation Matrix for details.

Operating Requirements

	Minimum	Maximum
Air Temperatures	50°F (10°C)	100°F (38°C)
Water Temperatures	40°F (4.4°C)	100°F (38°C)
Remote Cond. Temps	-20°F (-29°C)	120°F (49°C)
Water Pressures	20 PSIG (1.4 bar)	80 PSIG (5.5 bar)
Electrical Voltage	-10%	+10%

Specifications and design are subject to change without notice.

Scotsman Ice Systems
775 Corporate Woods Parkway
Vernon Hills, IL 60061

1-800-SCOTSMAN
Fax: 847-913-9844
E-mail: customer.service@scotsman-ice.com

www.scotsman-ice.com

© 2009 Scotsman Ice Systems.

Ace Mart Restaurant Supply

Scotsman Ice Systems

B222S, B230P, B322S, B330P, B530P/S, B842S, B948S – Storage Bins

B222S, B230P, B322S, B330P, B530P/S, B842S, B948S - Storage Bins

Modular Storage Bins

B530S shown with optional KLP8S legs

Features

New sleek, contemporary styling. A perfect match to Prodigy cube ice machines and other Scotsman ice machines.

Convenient, built-in scoop holder.*

Scoop incorporates antimicrobial Agion® for better sanitation.

Easily removable baffle, no tools required for cleaning.*

Unique recessed drain fitting for maximum installation flexibility.

Spring loaded door with hidden hinges for easy opening and closing.*

Available in stainless steel or durable rotocast plastic.

AHRI, NSF certified.

* except for B230P

Storage Capacity

B222S		B322S		B230P		B330P	
APPLICATION Capacity lb/kg	AHRI Capacity lb/kg	APPLICATION Capacity lb/kg	AHRI Capacity lb/kg	APPLICATION Capacity lb/kg	AHRI Capacity lb/kg	APPLICATION Capacity lb/kg	AHRI Capacity lb/kg
242/110	190/86	370/168	290/132	242/110	190/86	344/156	270/123

B530P/S		B842S		B948S	
APPLICATION Capacity lb/kg	AHRI Capacity lb/kg	APPLICATION Capacity lb/kg	AHRI Capacity lb/kg	APPLICATION Capacity lb/kg	AHRI Capacity lb/kg
536/244	420/191	778/353	610/277	893/406	700/319

Application capacity is based on 90% of total volume in the cubic feet x 34 lb/ft^3
AHRI capacity is based on 80% of total volume in cube feet x 30 lb/ft^3

AHRI CERTIFIED www.ahridirectory.org Ice Storage Bins AHRI Standard 820

NSF

agion® Nature's antimicrobial

Polyurethane Insulation

Foam insulation is forced between the wall and liner under heat and pressure to form a perfect wall to wall bond, preserving ice supply for long periods.

Bin Interior

The polyethylene bin interior is sanitary and easy to clean. Resists scratches and scuffs from ice scoops.

Warranty

- 3 years parts and labor on all components.

Warranty valid in North, South & Central America.
Contact factory for warranty in other regions.

Scotsman Ice Systems
775 Corporate Woods Parkway
Vernon Hills, IL 60061

1-800-SCOTSMAN
Fax: 847-913-9844
E-mail: customer.service@scotsman-ice.com

www.scotsman-ice.com

Ace Mart Restaurant Supply

Scotsman Ice Systems

B222S, B230P, B322S, B330P, B530P/S, B842S, B948S - Storage Bins

Installation Note: Allow 6" space at back for utility connections.

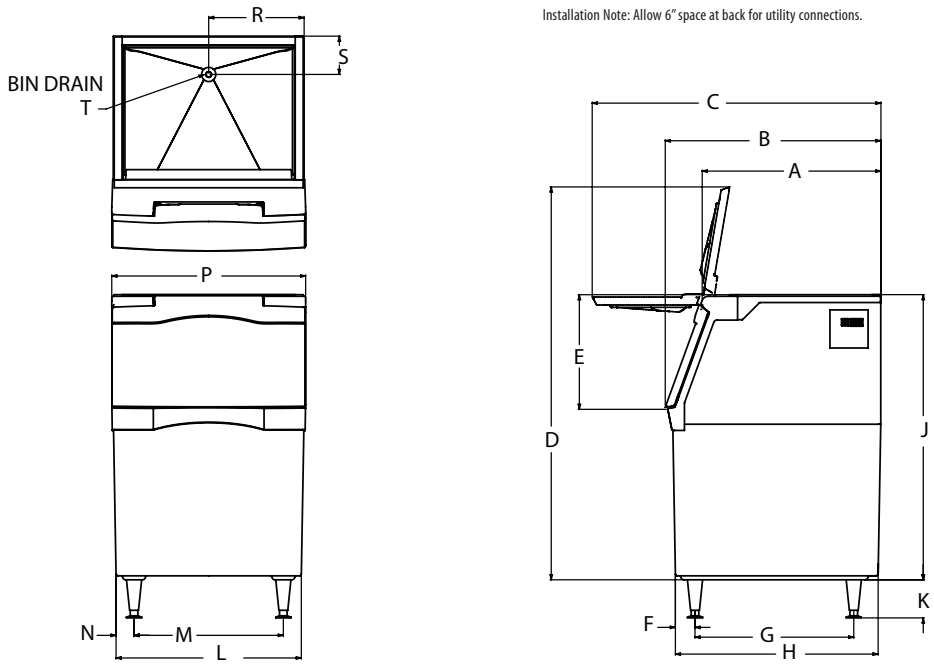

Dimensions

Model #	A	B	C	D	E	F	G	H	J	K	L	M	N	P	R	S	T
B222S	28.23	34	45.5	47.24	18	3.88	25	32.75	31	6	22	15.5	3.25	22.5	11	6	.75 NPT
B230P	26.75	32	37.5	32.75	10	2.25	26.5	31.00	28	6	30	25.5	2.25	30.63	15	2	.75 NPT
B322S	28.23	34	45.5	61.24	18	3.88	25	32.75	44	6	22	15.5	3.25	22.5	11	6	.75 NPT
B330P	28.15	34	45.5	47.24	18	3.33	25	32.42	31	6	30	23.5	3.08	30.5	15	6	.75 NPT
B530P/S	28.15	34	45.5	61.24	18	3.09	25	31.93	44	6	30	23.5	2.83	30.5	15	6	.75 NPT
B842S	28.07	34	45.5	61.87	18	3.88	25	32.75	44	6	42	35.5	3.25	42.5	21	6	.75 NPT
B948S	28.05	34	45.5	61.24	18	3.88	25	32.75	44	6	48	41.5	3.25	48.5	24	6	.75 NPT

Finish: S = Stainless Steel, P = Poly

Overall Dimensions

Model #	Unit* (W x D x H)
B222S	22" x 34" x 31"
B230P	30" x 31" x 28"
B322S	22" x 34" x 44"
B330P	30" x 34" x 31"
B530P	30" x 34" x 44"
B530S	30" x 34" x 44"
B842S	42" x 34" x 44"
B948S	48" x 34" x 44"

*Add 6" (15.2 cm) height for legs.

Shipping

Model #	Carton (W x D x H)	Weight (lb/kg)
B222S	24" x 36" x 35"	120 / 55
B230P	32" x 36" x 32"	74 / 34
B322S	24" x 36" x 47"	140 / 64
B330P	32" x 36" x 33"	90 / 41
B530P	32" x 36" x 47"	110 / 50
B530S	32" x 36" x 47"	150 / 68
B842S	44" x 36" x 47"	185 / 84
B948S	50" x 36" x 47"	220 / 100

Accessories*

Model #	Description
KBC1	Kit, Bin Casters for B530S, B842S, B948S & SB380.** Not for use with B222S, B322S or SB480 when using extensions.
KBC1P	Kit, Bin Casters for B330P & B530P.**
KLP7	Kit, Legs, 6", Flanged Feet, For B Bins, HD Dispensers, AFE, CU1/2/3 & NSE.
KLP8S	Kit, legs, 6", Stainless Steel, For B Bins, HD Dispensers, AFE, CU1/2/3 & NSE.
BGS10	Bagger, Hooks on Any Bin.
KBAG	Kit, Bags, 1000, For BGS10.
KSEALER	Kit, Tape Sealer, For BGS10.
KTAPE	Kit, Tape, 180 ft. Roll, For BGS10.
KHOLDER	Kit, Scoop Holder, Stainless Steel.

* None of the above listed accessories are available for use with the B230P bin.

**3.5" Diameter, 2 Locking, Raises Bin 4.5".

Specifications and design are subject to change without notice.

Scotsman Ice Systems
775 Corporate Woods Parkway
Vernon Hills, IL 60061

1-800-SCOTSMAN
Fax: 847-913-9844
E-mail: customer.service@scotsman-ice.com

www.scotsman-ice.com

© 2011 Scotsman Ice Systems.

Ace Mart Restaurant Supply