Scotsman

PRODIGY® smart thinking

C0322 – 300 lb Cube Ice Machine

C0322 – 300 lb Cube Ice Machine

Prodigy® Modular Cube Ice Maker

Shown on B322S bin.

Features

Prodigy® cubers use significantly less energy and water than other cube ice machines, exceeding California and Federal energy efficiency regulations.

AutoAlert™ indicator lights constantly communicate about operating status and actually signal your staff when it's time to descale, sanitize, and more—making upkeep practically foolproof.

The patented WaterSense adaptive purge control delivers maximum reliability by reducing scale buildup for a longer time between cleanings.

Preventative maintenance is simpler than ever with easily-removed panels allowing clear access to internal components and a diagnostic code display insuring the right fix the first time. Reusable air filter is easily removable from the outside.

All external panel components are crafted for optimal aesthetic appeal through superior fit and finish.

An optional advanced feature Smart-Board™ provides NAFEM data protocol and additional operational data that can be displayed on-screen or transmitted remotely, resulting in early alert and fast diagnosis of operating issues.

An optional Vari-Smart™ ultrasonic ice level control sensor allows you flexibility to program ice levels, for up to 7 days, keeping just the right amount of freshly made ice in the bin.

24 Hour Volume Production

Air Cooled		
70˚F/21˚C 50˚F/10˚C lb/kg	Air Water	ARI 90˚F/32˚C 70˚F/21˚C lb/kg
356/162		255/116

Water Cooled		
70˚F/21˚C 50˚F/10˚C lb/kg	Air Water	ARI 90˚F/32˚C 70˚F/21˚C lb/kg
366/166		280/127

Modular Bin Options

Model Number	Dimensions W" x D" x H"	ARI Certified Bin Capacity lb/kg	Application Capacity lb/kg	Finish	Ship Weight lb/kg
B222S	22 x 34 x 32	190/86	242/110	SS	120/55
B322S	22 x 34 x 44	290/132	370/168	SS	140/64

Bin: B222S

Cube Ice

Small Cube
⅞" x ⅞" x ⅜"
(2.22 x 2.22 x .95 cm)

Medium Cube
⅞" x ⅞" x ⅞"
(2.22 x 2.22 x 2.22 cm)

Common ice form, ideal for mixed drinks.

Warranty

- 3 years parts and labor on all components.
- 5 years parts and labor on the evaporator.
- 5 years parts on the compressor and condenser.

Warranty valid in North, South & Central America.
Contact factory for warranty in other regions.

Scotsman Ice Systems
775 Corporate Woods Parkway
Vernon Hills, IL 60061

1-800-SCOTSMAN
Fax: 847-913-9844
E-mail: customer.service@scotsman-ice.com

www.scotsman-ice.com

Scotsman®

The smart choice in ice.™

C0322 – 300 lb Cube Ice Machine

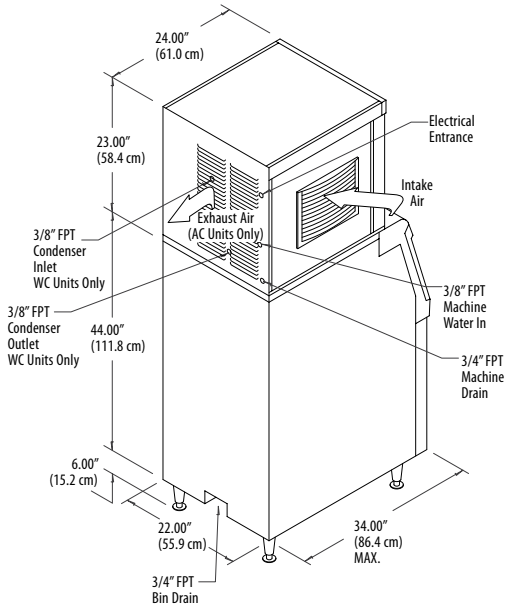

C0322 on B322 bin.

Installation Note: Allow 6" space at left, back and right side for ventilation and utility connections.

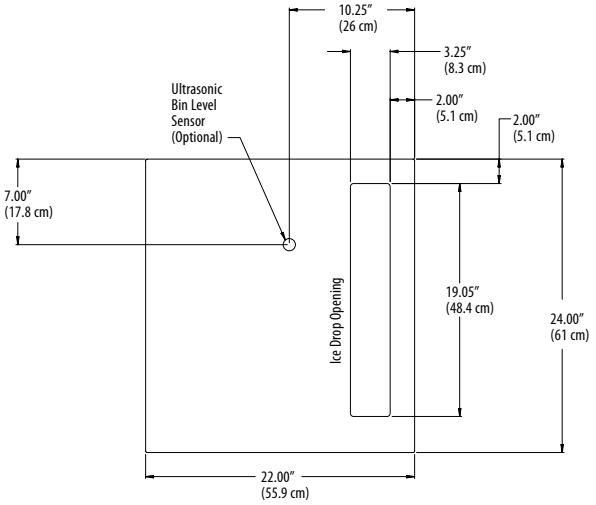

22" Prodigy plan view.

Specifications

Model Number* Cube Size: medium or small	Condenser Unit	Basic Electrical Volts/Hz/Phase	Max. Fuse Size or HACR Circuit Breaker (amps)	Circuit Wires	Min. Circuit Ampacity	Energy Consumption kWh/100 lb (45.4 kg) 90˚F(32˚C)/70˚F(21˚C)	Water Usage Gallons/100 lb (liters/45.4 kg) Potable 90˚F(32˚C)/ 70˚F(21˚C)	Water Usage Gallons/100 lb (liters/45.4 kg) Condenser 90˚F(32˚C)/ 70˚F(21˚C)
med. C0322MA-1A	Air	115/60/1	15	2	12.7	6.6	19.0/72.0	-
med. C0322MW-1A	Water	115/60/1	15	2	11.9	5.2	18.3/69.4	163.0/617.0
sm. C0322SA-1A	Air	115/60/1	15	2	12.7	6.6	19.0/72.0	-
sm. C0322SW-1A	Water	115/60/1	15	2	11.9	5.2	18.3/69.4	163.0/617.0

* 208-230/60/1 Voltage - Substitute "-32" in place of "-1", i.e. C0322SA-32A. = ENERGY STAR®

All Models

Dimensions (W x D x H):

Unit:

22" x 24" x 23"
(55.9 x 61.0 x 58.4 cm)

Shipping Carton:

25.5" x 27.5" x 28"
(64.8 x 69.9 x 71.1 cm)

Shipping Weight:

145 lb / 66 kg

BTUs per hour:

5,200

Accessories

Model Number	Description
KVS	Vari-Smart™ Ice Level Control - Program ice bin levels to match ice needs.
KSB	Smart-Board™ Advaced Control - Use additional operational data for fast diagnosis.
KSB-N	Smart-Board™ Advanced Control with Network - Network capable.

* Scotsman recommends all ice machines have water filtration. See Scotsman Sanitation Matrix for details.

Operating Requirements

	Minimum	Maximum
Air Temperatures	50°F (10°C)	100°F (38°C)
Water Temperatures	40°F (4.4°C)	100°F (38°C)
Remote Cond. Temps	-20°F (-29°C)	120°F (49°C)
Water Pressures	20 PSIG (1.4 bar)	80 PSIG (5.5 bar)
Electrical Voltage	-10%	+10%

Specifications and design are subject to change without notice.

Scotsman Ice Systems
775 Corporate Woods Parkway
Vernon Hills, IL 60061

1-800-SCOTSMAN
Fax: 847-913-9844
E-mail: customer.service@scotsman-ice.com

www.scotsman-ice.com

© 2009 Scotsman Ice Systems.