2 H.P. Model 200

JOB: _____ Item No.: _____

NEMA 4 Watertight Controls

MSS

MRSS

ARSS-2

ARSS

Optional Line Disconnect (LD) available on MSS, MRSS, & ARSS

FOOD WASTE DISPOSER SPECIFICATIONS

CORROSION RESISTANT BODY
Permanent molded from heat treated aluminum alloy.

TEFLON LIP WATER SEAL
Protects the motor from damage by water.

TAPERED ROLLER BEARING
Provides longer motor life, quiet operation and shock absorbing.

WATER COOLED MOTOR
Provides maximum efficiency and longer life.

QUIET OPERATION
Extra thick rubber mounting adaptor and drain outlet isolates sound and eliminates vibration.

Cone Assembly

TABLE CUT-OUT:
12" CONE - 12 7/8"
15" CONE - 15 7/8"
18" CONE - 18 7/8"

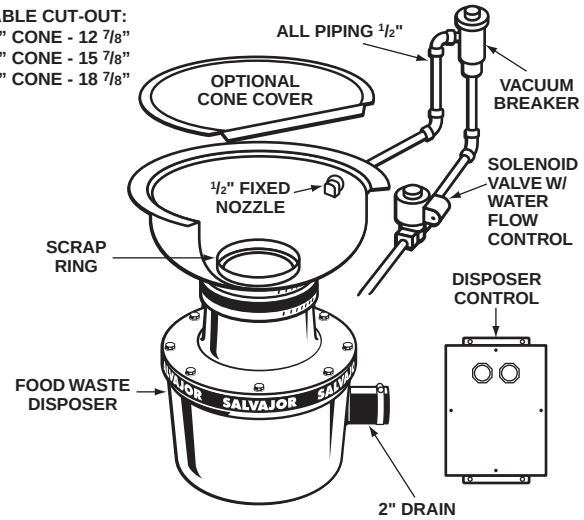

NOTE: INSTALL PER ALL APPLICABLE CODES

FULL LOAD AMPS

☐	115 Volts	1 Phase	24 Amps
☐	208 Volts	1 Phase	12.1 Amps
☐	230 Volts	1 Phase	12.0 Amps
☐	208 Volts	3 Phase	6.6 Amps
☐	230 Volts	3 Phase	6.0 Amps
☐	460 Volts	3 Phase	3.0 Amps

◆ SPECIFY EXACT OPERATING VOLTAGE ◆

Salvajor Model 200

Food Waste Disposer 2 HP – 1 Phase & 3 Phase

D E T A I L S A N D D I M E N S I O N S

SPECIFICATIONS:

MOUNTING – Rubber adaptor above grind chamber and rubber drain outlet isolates sound and eliminates vibration. No metal to metal contact.

EXTERIOR HOUSING – Permanent molded from heat treated, corrosion resistant aluminum alloy then computer machined to a smooth polished finish. Paint free.

SHREDDER – 8 inch diameter, machined high strength, wear resistant hardened carbide alloy.

ROTOR – 8 inch diameter with 4 cutter bars, machined high strength, wear resistant hardened carbide alloy.

MOTOR – 2 HP totally enclosed. Water cooled for efficiency and longer life. Built-in manual reset thermal overload protection. Available in 208 volts or 115/230 volts, 60 cycle, 1 phase and 208-230/460 volts, 60 cycle, 3 phase.

BEARINGS – Tapered roller (top)
Sealed ball (bottom)

SEAL – *Teflon Lip Water Seal.*

WATER REQUIREMENT – 5 gallons of cold water per minute.

WASTE OUTLET – Rubber drain accepts 2" piping.

DUAL DIRECTION GRINDING – Designed to operate in either direction. Direction of rotation can be controlled when installed with automatic reversing controls. ***Reversing rotation can double cutting teeth life.***

LEG SUPPORT (Optional) – Single leg, adjustable.

ASSEMBLIES: **(See Specification Sheet)**
- **CA – Cone Assembly with 12", 15" or 18" Cone**
- **SA – Sink Assembly with 3½" or 6½" Sink Collar**

DISPOSER CONTROLS: **(See Specification Sheet)**
- **MSS: (Non Reversing)**
- **MRSS: (Manual Reversing)**
- **ARSS-2: (Automatic Reversing)**
- **ARSS: (Automatic Reversing)**

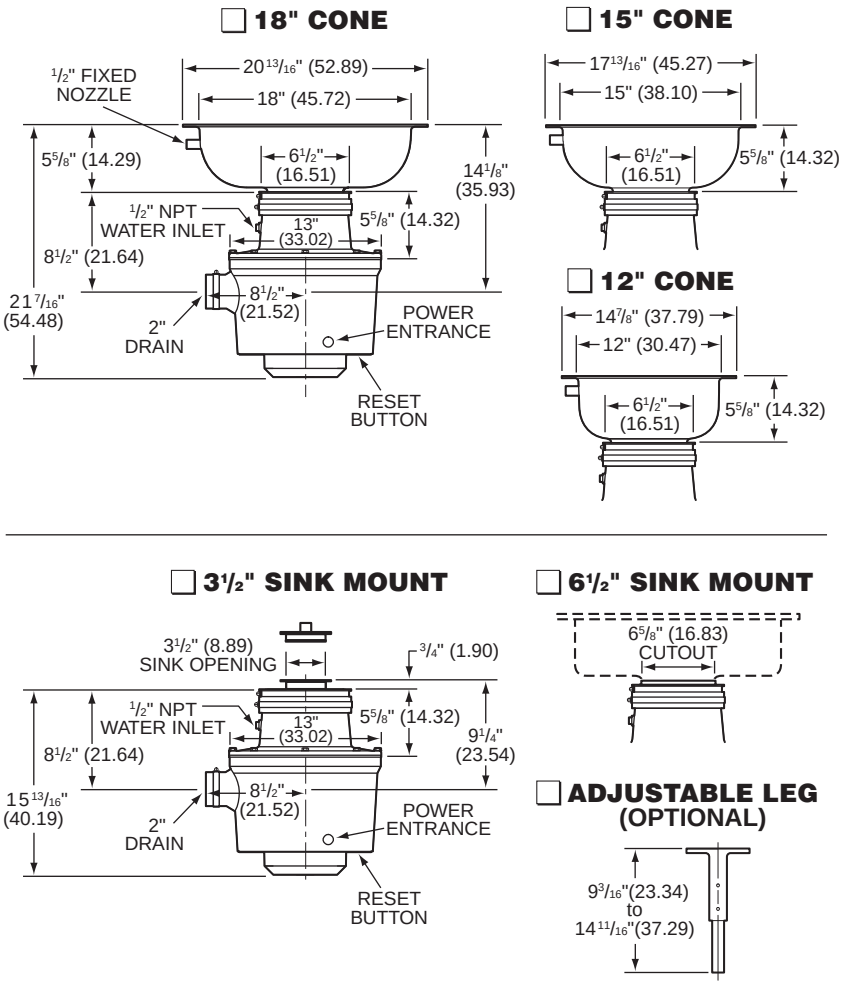

NOTE: Dimensions in parenthesis are in centimeters
(Specifications subject to change without notice)
Current specification details may be found online at www.salvajor.com

SAMPLE SPECIFICATION

200-CA-18	ARSS	(230/60/3)
Model; Cone Size; Assembly	Disposer Control	Electrical Specs.

◆ **SPECIFY EXACT OPERATING VOLTAGE** ◆

The Salvajor Company 4530 East 75th Terrace Kansas City, Missouri 64132-2081, USA
1-800-SALVAJOR (816) 363-1030 FAX: 1-800-832-9373
www.salvajor.com Email: sales@salvajor.com service@salvajor.com

Manufacturers of Commercial Food Waste Disposing Systems since 1944

Printed in USA
Form No.S200-11-BH