robot coupe®

"Inventor & World Leader in Food Processors"

R2N

Commercial Food Processor

The improved R2N from Robot Coupe

- 3 quart "stock pot" shaped, cutter bowl with handle and "S" blade. Grey plastic standard, available in clear.
- Direct drive, fan-cooled 1/2 H.P. motor.
- Attachments easily removed for cleaning.
- Continuous feed vegetable prep attachment with two deep feed openings.
- Stainless steel cutting plates
- See-thru lid.
- Comes with 2 cutting plates as standard.
- "On-off" & pulse switches.
- 3 year motor warranty.
- 1 year parts and labor warranty.

Prepare 850 servings in 3 hours or less!

Vegetable prep attachment specially designed for quality, continuous feed slicing, shredding, grating and julienne. Accomodates 21 different processing blades.

Bowl attachment designed for vertical cutting and mixing: mix, chop, puree, blend, mix and knead doughs.

Robot Coupe U.S.A., Inc.
P.O. Box 16625
Jackson, MS 39236-6625
1-800-824-1646 • (601) 898-8411
FAX: (601) 898-9134
www.robotcoupeusa.com • e-mail: robocoup@misnet.com

SPECIFICATIONS ON REVERSE SIDE

robot coupe®

"Inventor & World Leader in Food Processors"

R2N

Commercial Food Processor

Specifications

STANDARD MODEL: Includes motor base unit with "on-off" pulse switch, 3 quart cutter bowl with handle and stainless steel "S" blade, continuous feed unit with discharge plate, one medium 5/64" grating plate and one 5/32" slicing plate.

ELECTRICAL: 120V, 60 cycle, 7.0 Amps.

MOTOR: 1/2 H.P., capacitor-type, fan-cooled, single phase, 1725 R.P.M.

SWITCHING: "on-off"and pulse push type switch, that will not operate with bowl or cover off.

BOWL CAPACITY: 3 Quarts.

WEIGHT: 29 lbs. net, 31 lbs. approximate shipping weight.

OPTIONAL EQUIPMENT: cutter bowl available in clear or grey plastic and stainless steel.
19 additional processing plates. Free standing plate rack R255 holds 9 processing plates.

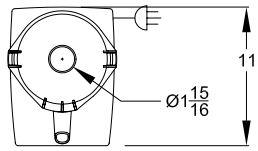

BOWL UNIT

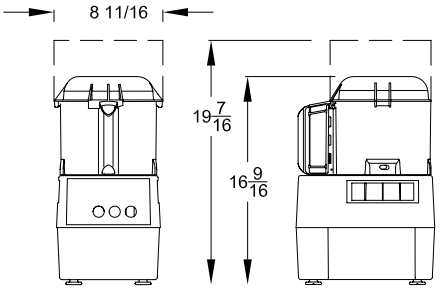

WRK 3/26/03 8:37 AMKW-R2N 3Qt.dwg

PROCESSING PLATES:

Slicing Plates
R210 - 5/64" (2mm)
R211 - 5/32" (4mm)
R270 - 1/4" (6.5mm)
R291 - 1/32" (1mm)
R292 - 1/8" (3mm)
R293 - 3/16" (5mm)

Waved Slicing Plate
R212 - 1/16" (1.5mm)

Grating Plates
R271 - 1/64" (0.5mm) Hard Cheese
R208 - 1/16" (1.5mm) Fine
R209 - 5/64" (2mm) Medium
R281 - 5/32" (4mm) Medium Coarse
R280 - 1/4" (6.5mm) Coarse
R215 - 5/16" (8mm) Extra Coarse

Pulping Plates
R294 - 1/64" (.7mm) Pulping
R295 - 1/32" (1mm) Pulping

Julienne Plates
R213 - 1/4" (6.5mm)
R214 - 5/64" (2mm)
R288 - 5/32" (4mm)
R296 - 5/64" x 5/32" (2x4mm)
R297 - 5/64" x 1/4" (2x6mm)
R298 - 5/16" x 5/16" (8x8mm)

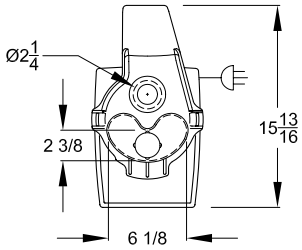

CONTINUOUS FEED UNIT

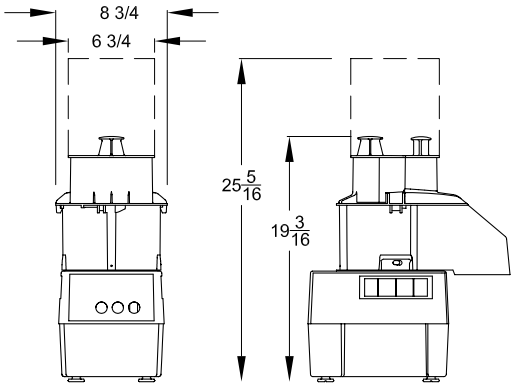

WRK 3/26/03 8:37 AMKW-R2N 3Qt.dwg

Robot Coupe U.S.A., Inc.
P.O. Box 16625
Jackson, MS 39236-6625
1-800-824-1646
(601) 898-8411
FAX: (601) 898-9134
www.robotcoupeusa.com
e-mail: robocoup@misnet.com

Distributed by:

Robot Coupe reserves the right to change specifications. Call the factory for latest specifications and recommendations.
© 2003 Robot Coupe U.S.A., Inc. Litho in U.S.A.