908-A SERIES WEDGE WITCH™

908-A8

HEAVY-DUTY WEDGER:

Save natural juices and flavor by cleanly sectioning fruits and vegetables with Prince Castle's Wedge Witch™.

Simply place your lemons, limes or other fruits and vegetables into the Wedge Witch™, and with one firm, quick stroke, the Wedge Witch™ instantly delivers perfect wedges every time.

The solid, cast-aluminum construction and non-skid rubber feet provide stability and long lasting performance. The safety head prevents misalignment, blade damage, and protects the hands of the operator. Select either of the easy-to-clean six or eight section models.

The Wedge Witch™ is great for garnishes for drinks, entrees and salads. Blades are simple to replace.

STANDARD FEATURES:

- Produces uniform and attractive wedges.
- Easy to use.
- One hand operation.
- Stainless steel blades.
- Sturdy cast aluminum construction.
- Four wide-stance legs for stability.
- Non-skid feet.
- Simple to clean -- just rinse.
- Two models available for a variety of wedge sizes.

MODELS:

Part No.	Description
908-A6	Cuts six wedges
908-A8	Cuts eight wedges

908-71

908-A SERIES WEDGE WITCH™

SPECIFICATIONS

LAYOUT:

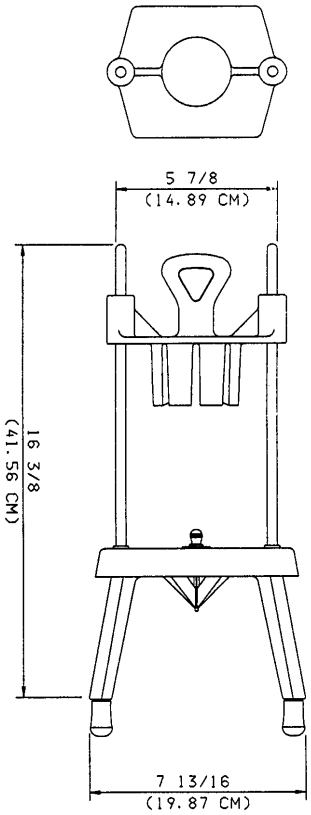

Designs and specifications are subject to change without notice.

DIMENSIONS:

Model Number	Width in (cm)	Height in (cm)	Length in (cm)	Shipping Weight lb (kg)	Shipping cu.ft. (cu.m)
908-A	10 (25.4)	16.38 (41.56)	7.81 (19.87)	6 (2.7)	.8 (.02)

ORDERING INFORMATION:

Model	Description
908-A6	6 Section Wedge Witch™
908-A8	8 Section Wedge Witch™
908-69	4 Section Replacement Blade Set*
908-70	6 Section Replacement Blade Set
908-71	8 Section Replacement Blade Set
908-72	10 Section Replacement Blade Set*
908-73	12 Section Replacement Blade Set*

* 4, 10 and 12 section models are no longer sold. Only replacement blade sets are available.

CERTIFICATIONS:

NSF

Genuine Parts Protect YOU All-Ways !

2009/10A

355 East Kehoe Blvd. Carol Stream, IL 60188 Tel: 630-462-8800 Fax: 630-462-1460 Toll Free: 800-PCASTLE www.princecastle.com