Lincoln

Impinger® Countertop Single Belt Conveyorized Electric Oven

Impinger® Countertop Oven

Models:

☐ 1301 ☐ 1302

Lincoln IMPINGER®

Standard Features:

- AIR IMPINGEMENT uses hot air under pressure which surrounds food with small jets of hot air. This allows for rapid heating, cooking, baking and crisping of foods, two to four times faster than conventional ovens, depending on food product cooked.
- Uniform heating/cooking of food products offer a wide tolerance for rapid baking at a variety of temperatures.
- Safety of conveyorized product movement is a definite advantage over batch type ovens, as it eliminates the need for constant tending.
- Oven has one self-contained heating system
- Customer specific air fingers on top and bottom allow for heat to be adjusted and controlled by zoning.

Specifications:

General: Electric Baking/Finishing Oven is self-contained, conveyorized and stackable up to two (2) high. It is designed for countertop use and must be used with appropriate four-inch (4") legs for proper cooling. Temperature is adjustable from 200°F (93°C) to 550°F (288°C). Conveyor speed is adjustable from 1 minute to 24 minutes cooking time. Conveyor and air distribution fingers are removable through the side-access panels for easy cleaning. The conveyor is offered in either the thirty-one inch (31") standard length or fifty inch 50" extended model. Crumb pans are located below the conveyor belt outside the baking chamber on the extended conveyor only.

Controls: The oven controls are located on the front of the oven. It includes a power on/off switch, temperature control and conveyor speed control. A heating indicator light illuminates when heating to let you know when the oven is calling for heat.

Construction: Exterior is fabricated from No. 4 finish stainless steel. The air distribution system consists of an axial type fan powered by 1/10 hp AC motor. The headed air is forced through four (4) distribution fingers located in the baking chamber with two (2) above the conveyor belt and two (2) below. Each finger has required number of holes to create the air impingement effect on the food product passing through the baking chamber on the conveyor belt. The conveyor belt is a flexible stainless steel design with capacity for 16" (406mm) wide product and a travel distance of 31" (787mm) on the standard conveyor or 50" (1269mm) on the extended conveyor, of which 20" (508mm) is in the baking chamber. The direct drive conveyor is powered by a DC motor. The fuses for the controls and blower motor are located on the side of the control box.

NSF UL CSA

1111 North Hadley Road
P.O. Box 1229
Fort Wayne, Indiana 46801-1229

Tel 1.260.459.8200
Fax 1.260.436.0735
E mail info@lincolnfp.com
web www.lincolnfp.com

www.lincolnfp.com

ISO 9001 CERTIFIED

Enodis®

Lincoln

Impinger® Countertop Oven

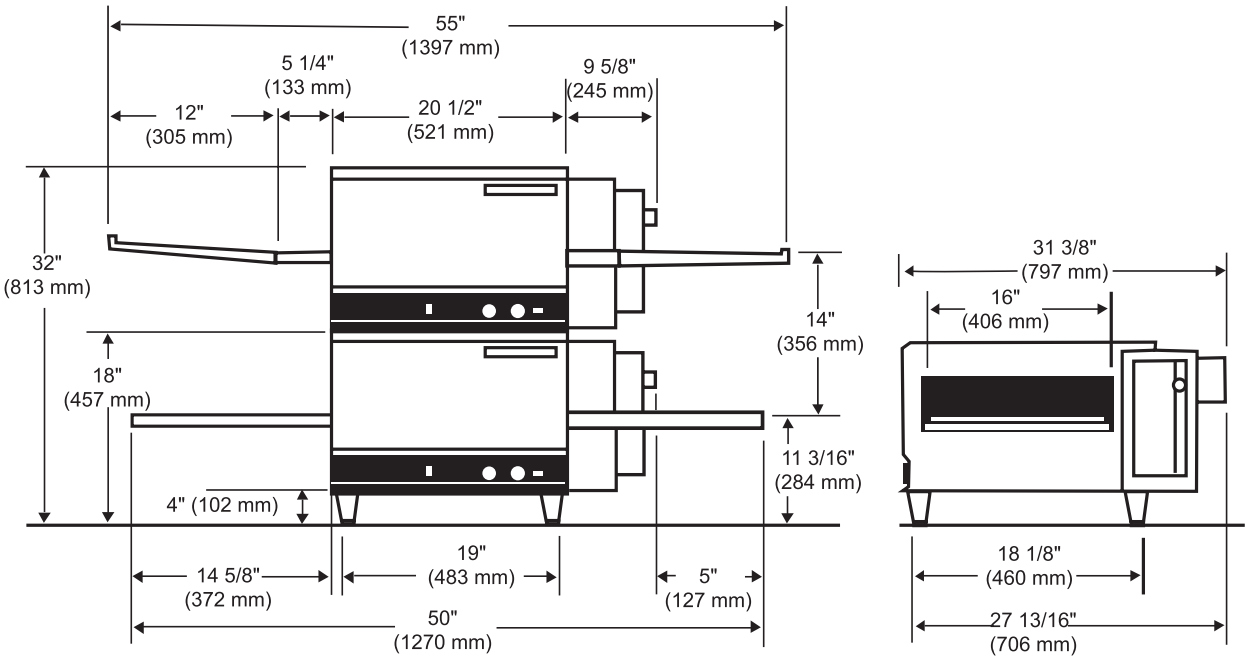

ELECTRICAL SERVICE: Heat is supplied by one (1) element at 5600 watts. Each oven is rated at 6kW. The ovens are available in 208V and 240V and are single phase. The oven comes with a factory installed cord wth NEMA 6-50 plug. A separate circuit breaker is required for each oven deck with the proper voltage, amperage, phase and hertz as indicated by model number.

VENTILATION: Ventilation is recommended, but not required. Local codes prevail. These are the "authority having jurisdiction" as stated by the National FIRE Protection Association, Inc., in NFPA 96-1994.

SPACING: The oven must have 6" (152mm) of clearance from combustible surfaces and 24" (610mm) clearance on both sides from other cooking equipment. The conveyor is removed from the control side of the oven.

WARRANTY: All new Impinger® Countertop ovens come with a one (1) year parts/labor warranty. Defective parts of the original equipment on all installed ovens are warranted for one (1) year from the date of purchase.

Testing Agency Listing	Catalog No.	Width (31" Conveyor)	Width (50" Conveyor)	Depth	Height Single Stack	Height Double Stack	Input Rate	Volts	Amps	Phase	Hz
NSF/UL/CSA	1301*	35³/₈" (899mm)	50" (1270mm)	31³/₈" (797mm)	18" (457mm)	32" (813mm)	6 kW	208	29	1	60
NSF/UL/CSA	1302*	35³/₈" (899mm)	50" (1270mm)	31³/₈" (797mm)	18" (457mm)	32" (813mm)	6 kW	240	29	1	60

NOTES:
Specifications subject to change without notification.
* For the quieter version of the CTI add a "-4" to the appropriate catalog number (ex. 1301-4 or 1302-4).
If double stacked, each oven must be wired separately to carry rated load. U.S. Patent pending.

Models:
1301
1302

1111 North Hadley Road
P.O. Box 1229
Fort Wayne, Indiana 46801-1229

Tel 1.260.459.8200
Fax 1.260.436.0735
E mail info@lincolnfp.com
web www.lincolnfp.com

©2006 Lincoln Foodservice Products, Inc.

Printed in the U.S.A.
1166-2.5K-08/06-SP

Enodis®