Item # _____

Job _____

Metro C5 1 Series Non-Insulated Heated Holding and Proofing Cabinets

- **Control:** Three holding modules are available. All feature an easy-to-read digital thermometer, recessed control dials, a master on/off switch, and power indicator lights.
  - **Combination Module:** At the flip of a switch change from heated holding mode to proofing mode. Individual analog controls for temperature and humidity levels.
  - **Holding Module:** For heated holding applications. Analog temperature control and a passive humidity generation system.
  - **Proofing Module:** For proofing applications only. Individual analog controls for temperature and humidity levels.
- **Performance:** All modules provide fast heat-up and recovery through a thermostatically controlled, forced air heating system.
- **Sizes:** C5 1 Series cabinets are available in Full Height (69 3/4", 1772mm), 3/4 Height (57 3/4", 1467mm), and 1/2 Height (42 3/4", 1086mm) sizes.
- **Doors:** Clear polycarbonate doors provide visibility of the contents of the cabinet without the heat loss associated with opening the door.
- **Capacity:** Three slide styles provide maximum holding capacity.
  - **Universal:** Adjustable wire slides, with SiteSelect™, hold 18"x26" sheet, 12"x20" steam table, 2/1 or 1/1 GN pans, and adjust on 1 1/2" (38mm) increments.
  - **Lip Load:** Fixed aluminum extrusions hold 18"x26" sheet pans on 1 1/2" (38mm) increments.
  - **Fixed Wire:** Fixed slides hold 18"x26" sheet, 12"x20" steam table, 2/1 GN, or 1/1 GN pans on 3" (76mm) increments.
- **Removable Module:** All modules are removable, without tools, for easy cleaning of the cabinet interior. Future module upgrades or changes can occur without cabinet body replacement.
- **Reliability:** Reliability and durability are designed into every C5. High quality components provide a long life of worry-free use.

Full Height

Options/Accessories*
- Small Item Shelf (C5-SHELF)
- Stainless Steel Legs (C5-SSLEGS)
- Universal Slide Pair (C5-USLIDECPR)
- 6" Casters (C5-6CASTER)
- Rear Rigid Casters (C5-5RDGCSTR)
- Travel Latch (C5-TRVL)
- Right Angle Plug (C5-RTANGPLG)
- Rear Push Handle (C5-RHANDLE)
- Perimeter Bumper (C5-PERMBUMP-1)
- Left-Hand Hinging (DD3768)

**Specify as a line item with an "A" added to the end of the cabinet part number.*

Power Options
- Export 240/220 Modules with Centigrade Thermometer Display

3/4 Height

1/2 Height

*Patents Pending

InterMetro Industries Corporation
North Washington Street
Wilkes-Barre, PA 18705
www.metro.com

C5 1 Series Non-Insulated Heated Holding and Proofing Cabinets

Specifications

- **Cabinet Material:** .063" (1.8mm) aluminum, natural interior, brushed exterior with .125" (3.2mm) aluminum chassis.
- **Casters:** Four casters with 5" (127mm) donut neoprene wheel, double ball bearing swivel, ball bearing axel, nickel plated, two with brake.
- **Clear Doors:** Extruded aluminum powder coated frame with .090" (2.3mm) polycarbonate window.
- **Hinges:** Field reversible, double hinged, 180° swing, with long-life nylon bearings.
- **Gaskets:** High temperature, door mounted, Santoprene gaskets.
- **Latches:** Polymer, high-strength, magnetic pull latch with lever-action release.
- **Universal Slides:** 1/4" (6.4mm) dia. nickel-chrome electroplated wire, adjustable on 1 1/2" (38mm) increments.
- **Lip Load Slides:** 1 1/2"x1/2"x.063" (38x38x1.8mm) extruded aluminum channel slides, 1 1/2" (38mm) fixed spacing.
- **Fixed Wire Slides:** 1/4" (6.4mm) dia. nickel-chrome electroplated wire, welded on 3" (76mm) spacing.
- **Slide Capacities:**

Cabinet Size	Universal Slides: Slide Pairs Provided	Universal Slides: Slide Pairs Max.*	Universal Slides: Pan Capacity** 18"x26"	Universal Slides: Pan Capacity** 12"x20"x2 1/2"	Lip Load Slide Pan Capacity 18"x26"	Fixed Wire Slides Pan Capacity 18"x26"	Fixed Wire Slides Pan Capacity 12"x20"x2 1/2"
Full Height	18	37	18	34	35	18	34
3/4 Height	14	29	13	26	27	14	26
1/2 Height	8	17	8	16	17	8	16

*Maximum number of slide pairs @ 1 1/2" spacing. Additional slide pairs ordered separately.
**Capacity based on standard number of slide pairs provided.

- **Drip Trough:** Smooth polymer drip trough with catch pan.
- **Holding Modules:** Removable without tools, digital thermometer, recessed control dials, master on/off switch, "Power On" light, water pan, ball bearing blower forced air system, 7 1/2' cord, UL, CUL, and NSF Listed.

Electrical and Performance:

- **Combination Module:** 2000 Watt, 120 Volts, 60 Hz., single phase, 16.7 Amps. 80˚F to 190˚F operating temperature range. 95% RH at 95˚F. NEMA 5-20P plug.
- **Holding Module:** 2000 Watt, 120 Volts, 60 Hz., single phase, 16.7 Amps. 80˚F to 190˚F operating temperature range. NEMA 5-20P plug.
- **Proofing Module:** 1440 Watt, 120 Volts, 60 Hz., single phase, 12 Amps. 80˚F to 120˚F operating temperature range. 95% RH at 95˚F. NEMA 5-15P plug.

Part Numbers

Part #	Module	Doors	Slides
FULL HEIGHT CABINETS			
C519-CFC-4	Combo	Full-Length Clear	Fixed Wire
C519-CFC-U	Combo	Full-Length Clear	Universal Wire
C519-CFC-L	Combo	Full-Length Clear	Lip Load
C519-HFC-4	Holding	Full-Length Clear	Fixed Wire
C519-HFC-U	Holding	Full-Length Clear	Universal Wire
C519-HFC-L	Holding	Full-Length Clear	Lip Load
C519-PFC-4	Proofing	Full-Length Clear	Fixed Wire
C519-PFC-U	Proofing	Full-Length Clear	Universal Wire
C519-PFC-L	Proofing	Full-Length Clear	Lip Load
3/4 HEIGHT CABINETS			
C517-CFC-4	Combo	Full-Length Clear	Fixed Wire
C517-CFC-U	Combo	Full-Length Clear	Universal Wire
C517-CFC-L	Combo	Full-Length Clear	Lip Load
C517-HFC-4	Holding	Full-Length Clear	Fixed Wire
C517-HFC-U	Holding	Full-Length Clear	Universal Wire
C517-HFC-L	Holding	Full-Length Clear	Lip Load
C517-PFC-4	Proofing	Full-Length Clear	Fixed Wire
C517-PFC-U	Proofing	Full-Length Clear	Universal Wire
C517-PFC-L	Proofing	Full-Length Clear	Lip Load
1/2 HEIGHT CABINETS			
C515-CFC-4	Combo	Full-Length Clear	Fixed Wire
C515-CFC-U	Combo	Full-Length Clear	Universal Wire
C515-CFC-L	Combo	Full-Length Clear	Lip Load
C515-HFC-4	Holding	Full-Length Clear	Fixed Wire
C515-HFC-U	Holding	Full-Length Clear	Universal Wire
C515-HFC-L	Holding	Full-Length Clear	Lip Load
C515-PFC-4	Proofing	Full-Length Clear	Fixed Wire
C515-PFC-U	Proofing	Full-Length Clear	Universal Wire
C515-PFC-L	Proofing	Full-Length Clear	Lip Load

Add X for 240/220v, 50/60 Hz., single phase for Export.
Ex: C519-CXFC-4

NEMA 6-15P

NEMA 5-20P

NEMA 5-20P

NEMA 5-15P

Dimensions

All cabinets are 25 1/8" (638mm) wide and 30 1/4" (768mm) deep.

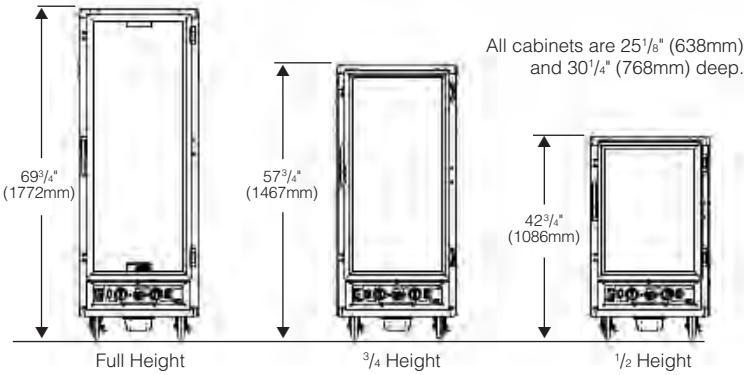

Metro Heated cabinets are for hot food holding applications only.

All Metro Catalog Sheets are available on our Web Site: **www.metro.com**

InterMetro Industries Corporation
North Washington Street, Wilkes-Barre, PA 18705
Phone: 570-825-2741 • Fax: 570-825-2852
For Product Information Call: 1-800-433-2232

L03-269
Printed in U.S.A. 10/07

Information and specifications are subject to change without notice. Please confirm at time of order.

Copyright © 2007 InterMetro Industries Corp.