Item # _____

Job _____

POLYMER UTILITY CARTS: BC SERIES/DEEP LEDGE SERIES

Metro's BC Series and Deep Ledge Series Utility Carts are designed for a wide variety of applications.

- **Ultimate Cleanability:** Smooth surfaces are designed to resist staining and wipe clean easily.
- **Corrosion-Proof Shelves:** All-polymer shelf will never corrode.
- **Contains Spills:** BC Series shelves feature a 1/2" (13mm) raised ship's edge design; Deep Ledge Series shelves feature a deeper 2 3/4" (70mm) ledge to contain product or spills.
- **Available in Four Standard Colors:** Gray, blue, black, and slate blue. Slate blue contains ***Microban® product protection.** Microban product protection inhibits the growth of bacteria, mold, mildew, and fungi that cause odors, stains, and product degradation. (See models ending in "-MB").
- **Attractive Aesthetics** allow for use in a variety of applications.
- **Sturdy Construction:** Each shelf can hold up to 150 lbs. (68kg); each unit can hold up to 400 lbs. (181kg).
- **Easy-to-Adjust:** Optional center shelf adjusts on 1" (25mm) increments.
- **Ergonomic Handle** designed for easy use.
- **Easy, No-Tool Assembly:** Ships knocked down.
- **BC Series and Deep Ledge Series carts are NSF listed.**

Deep Ledge Cart (3-Tier)

BC Cart (3-Tier)

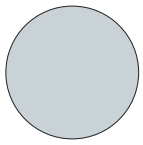

Gray (-G)

Blue (-BU)

Black (-BL)

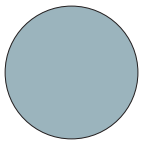

Microban product protection in Slate Blue color (-MB)

*MICROBAN® and the MICROBAN® symbol are registered trademarks of the Microban Products Company, Huntersville, NC.

InterMetro Industries Corporation
North Washington Street
Wilkes-Barre, PA 18705
www.metro.com

POLYMER UTILITY CARTS: BC SERIES/DEEP LEDGE SERIES

Specifications for BC Series and Deep Ledge

Cart, Utility, consisting of at least 2 high-density polyethylene, injection-molded shelves and 4 chrome-plated posts. 2-shelf cart design is such that user may add an intermediate shelf if deemed necessary. Cart will roll on four (4) 4" (102mm) diameter thermoplastic, mark-resistant swivel/stem casters. Cart rated at 150 lbs. (68kg) per shelf, 400 lbs. (181kg) per unit.

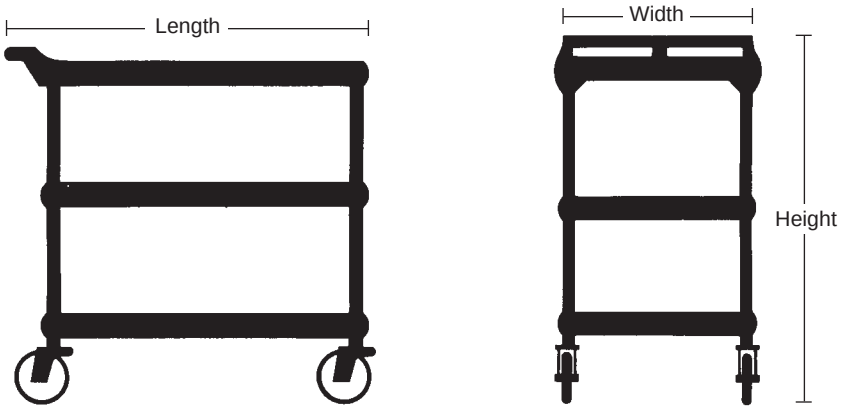

BC Series Carts

Cart is available in 2-shelf and 3-shelf models.

Model No.*	Width/Length/Height (in.)	(mm)	Description	Approx. Pkd. Wt. (lbs.)	(kg)
BC1627-24	18x29 1/2x33 1/4	457x749x845	2-shelf unit	27 1/2	12.4
BC1627-34	18x29 1/2x33 1/4	457x749x845	3-shelf unit	33	14.9
BC2030-24	21 1/2x33 3/4x33 1/4	546x857x845	2-shelf unit	34 1/2	15.6
BC2030-34	21 1/2x33 3/4x33 1/4	546x857x845	3-shelf unit	43	19.5
BC2636-24	27x39 1/2x33 1/4	686x1003x845	2-shelf unit	40 1/2	18.3
BC2636-34	27x39 1/2x33 1/3	686x1003x845	3-shelf unit	52	23.5

Cart is available in 2-shelf and 3-shelf. *Colors available are: Gray (G), Blue (BU), and Black (BL). Slate Blue has built-in Microban product protection.
*Add color designation to part number when specifying, i.e.: BC1627-34**G** = Three-shelf Gray unit.

BC Carts with Microban® Product Protection

(Slate blue color only)

Model No.	Description	Width/Length/Height (in.)	(mm)	Approx. Pkd. Wt. (lbs.)	(kg)
BC1627-24MB	2-Shelf Unit	18x28x33 1/4	457x711x845	27 1/2	12.4
BC1627-34MB	3-Shelf Unit	18x28x33 1/4	457x711x845	33	14.9
BC2030-24MB	2-Shelf Unit	21 1/2x33 3/4x33 1/4	546x857x845	34 1/2	15.6
BC2030-34MB	3-Shelf Unit	21 1/2x33 3/4x33 1/4	546x857x845	43	19.5

Additional Intermediate Shelves

Model No.*	Width/Length (in.)	(mm)	Approx. Pkd. Wt. (lbs.)	(kg)
**BC1627-F	18x27 3/8	457x695	9	4.1
**BC2030-F	21 1/2x31 1/2	546x800	9.5	4.3
BC2636-F	27x37 5/16	686x948	12	5.5

*Colors available are: Gray (G), Blue (BU), and Black (BL).
Add color designation to part number when specifying, i.e.: BC1627-F**BL** = Black Intermediate BC Shelf.
Additional shelves for carts with Microban product protection are available. Add designation (-MB**).

POLYMER UTILITY CARTS: BC SERIES/DEEP LEDGE SERIES

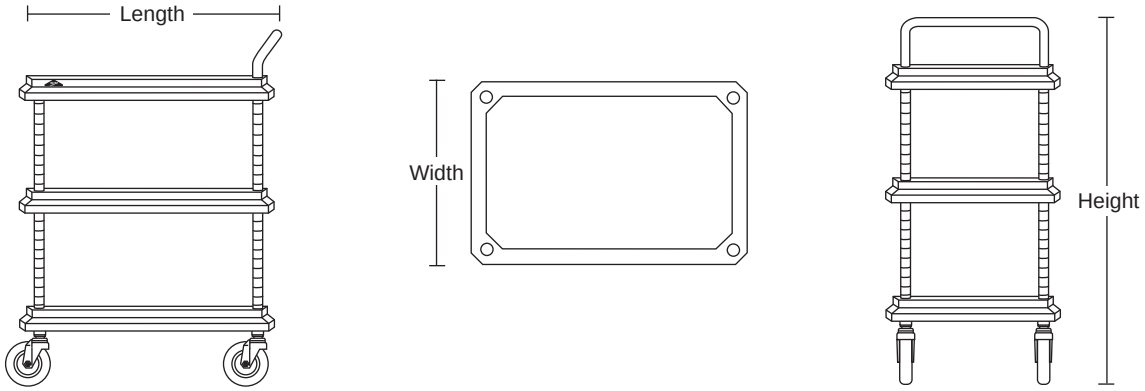

Deep Ledge Series Carts

Cart is available in 2-shelf and 3-shelf models.

Model No.*	Description	Width/Length/Height (in.)	(mm)	Approx. Pkd. Wt. (lbs.)	(kg)
BC2030-2D	2-shelf unit	21 1/2x32 3/4x41	546x831x1041	29	31.1
BC2030-3D	3-shelf unit	21 1/2x32 3/4x41	546x831x1041	37 1/2	17.0
BC2636-2D	2-shelf unit	27x38 3/4x41	685x984x1041	35	15.9
BC2636-3D	3-shelf unit	27x38 3/4x41	685x984x1041	46 1/2	21.1

Colors available are: Gray (G), Blue (BU), and Black (BL).
*Add color designation to part number when specifying, i.e.: BC2030-3D**G** = Three-shelf deep ledge cart in Gray.
Note: Models feature (4) 4" (102mm) diameter swivel casters.

Deep Ledge Utility Cart

Deep Ledge Carts with Microban® Product Protection

(Slate blue color only)

Model No.	Description	Width/Length/Height (in.)	(mm)	Approx. Pkd. Wt. (lbs.)	(kg)
BC2030-2DMB	2-Shelf Unit	21 1/2x32 3/4x41	546x832x1041	29	13.1
BC2030-3DMB	3-Shelf Unit	21 1/2x32 3/4x41	546x832x1041	37 1/2	17.0

Note: Models feature (4) 4" (102mm) diameter swivel casters.

Additional Intermediate Shelves

Model No.*	Width/Length (in.)	(mm)	Approx. Pkd. Wt. (lbs.)	(kg)
**BC2030D-	21 1/2x32	546x813	8.5	3.9
BC2636D-	27x38	686x965	11.5	5.2

*Colors available are: Gray (G), Blue (BU), and Black (BL). Add color designation to part number when specifying, i.e.: BC2030D-**G** = 20"x30" Gray Intermediate Deep Ledge Shelf.
Additional shelves for carts with Microban product protection are available. Add designation (-MB**).

Job _____

POLYMER UTILITY CARTS: BC SERIES/DEEP LEDGE SERIES

Accessories

Wastebasket with holder for BC Series Utility Cart

Utility Bin with holder for BC Series Utility Cart

Three-Shelf Deep Ledge Series Cart with Wastebasket and Utility Bin Accessories

Model No.	Description	Fits Cart	Width/Height/Depth (in.)	(mm)	Approx. Pkd. Wt. (lbs.)	(kg)
BCWB1	Wastebasket (including holder) for BC Series	BC1627	$17\frac{3}{8}$x$27\frac{1}{2}$x$13\frac{1}{4}$	440x700x337	5.5	2.5
BCWB2	Wastebasket (including holder) for BC Series	BC2030	$21\frac{1}{4}$x$27\frac{1}{2}$x$13\frac{1}{4}$	540x700x337	8.0	3.8
BCWB2D	Wastebasket (including holder) for Deep Ledge	BC2030-_D	$21\frac{1}{4}$x$27\frac{1}{2}$x$13\frac{1}{4}$	540x700x337	8.0	3.8
BCUB1	Utility Bin (including holder) for BC Series	BC1627	$17\frac{1}{2}$x$7\frac{3}{4}$x$14\frac{1}{2}$	445x197x368	3.8	1.7
BCUB2	Utility Bin (including holder) for BC Series	BC2030	$21\frac{1}{4}$x$7\frac{3}{4}$x$14\frac{1}{2}$	540x197x368	6.0	2.7
BCUB2D	Utility Bin (including holder) for Deep Ledge	BC2030-_D	$21\frac{1}{4}$x$7\frac{3}{4}$x$14\frac{1}{2}$	540x197x368	6.0	2.7
MF222	Wastebasket Only	BC & Deep Ledge Series	$14\frac{3}{8}$x$15\frac{3}{8}$x$10\frac{3}{8}$	365x391x264	2.8	1.3
UB1	Utility Bin Only	BC & Deep Ledge Series	$16\frac{3}{8}$x6x11	416x152x279	2.0	.9

Specifications

Bin — ABS thermoplastic
Wastebasket — polyethylene

All Metro Catalog Sheets are available on our Web Site: **www.metro.com**

InterMetro Industries Corporation
North Washington Street, Wilkes-Barre, PA 18705
Phone: 570-825-2741 • Fax: 570-825-2852

For Product Information:
U.S. and Canada: 1-800-992-1776
Outside U.S. and Canada: www.metro.com/contactus

L03-074A
Printed in U.S.A. Rev. 4/11

Information and specifications are subject to change without notice. Please confirm at time of order.

Copyright © 2011 InterMetro Industries Corp.