Item # _____

Quantity _____

C.S.I. Section 11400

HOBART

701 S Ridge Avenue, Troy, OH 45374
1-888-4HOBART • www.hobartcorp.com

AM SELECT DISHWASHER

STANDARD FEATURES

- .74 gallons per rack final rinse water
- 58 racks per hour – hot water sanitizing
- 65 racks per hour – chemical sanitizing
- NSF pot and pan listed for 2-, 4- & 6- minute cycles
- Timed wash cycles for 1, 2, 4 or 6 minutes
- Solid state, integrated controls with digital status indicators
- Self-draining, high efficiency stainless steel pump and stainless steel impeller
- Stainless steel drawn tank, tank shelf, chamber, trim panels, frame and feet
- Spring counterbalanced chamber with polyethylene guides
- Revolving, interchangeable upper and lower anti-clogging wash arms
- Revolving, interchangeable upper and lower rinse arms
- Slanted, self-locating, one-piece scrap screen and basket system
- Automatic fill
- Door actuated start
- Automatic drain closure
- Vent fan control
- External booster activation
- Delime cycle
- Service diagnostics
- NAFEM Data Protocol capable
- Straight-through or corner installation
- Hot water or chemical sanitation

VOLTAGE

- ❑ 208-240/60/1
- ❑ 208-240/60/3
- ❑ 480/60/3
- ❑ 200-240/50/3*
- ❑ 380-415/50/3*

*Not submitted for UL/CUL Listing

MODEL

- ❑ AM15

OPTIONS AT EXTRA COST

- ❑ Gas heat
- ❑ Sense-A-Temp™ 70°F rise electric booster heater
- ❑ Single point electrical connection for booster equipped machines (3 phase only)

ACCESSORIES

- ❑ ¾" pressure regulator valve
- ❑ Peg rack
- ❑ Combination rack
- ❑ Splash shield for corner installations
- ❑ Flanged and seismic feet
- ❑ End of cycle audible alarm (field activated)
- ❑ Delime notification (field activated)
- ❑ Drain water tempering kit

Specifications, Details and Dimensions on Inside and Back.

HOBART

AM SELECT DISHWASHER

AM SELECT
DISHWASHER – ELECTRIC

HOBART
701 S Ridge Avenue, Troy, OH 45374
1-888-4HOBART • www.hobartcorp.com

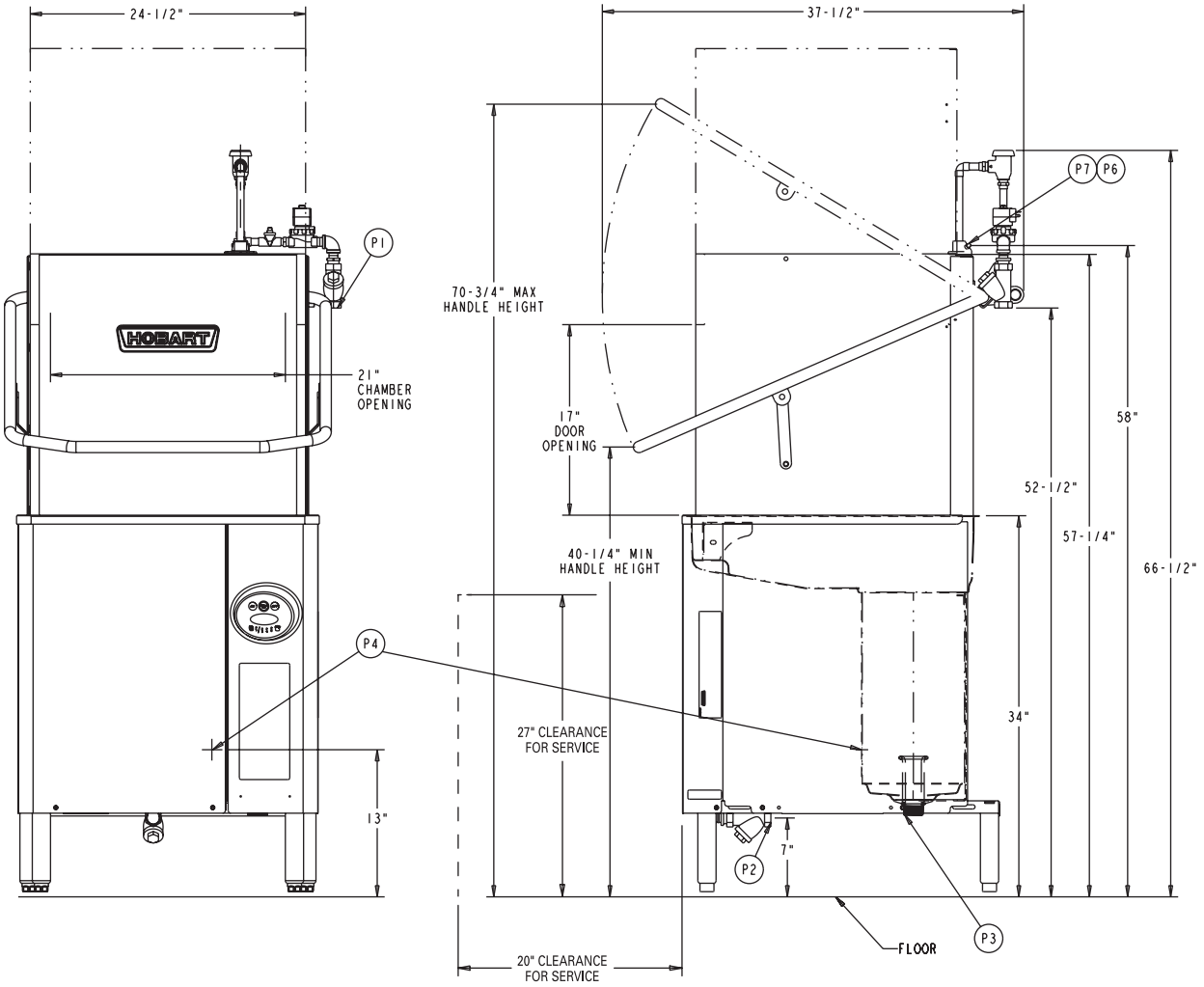

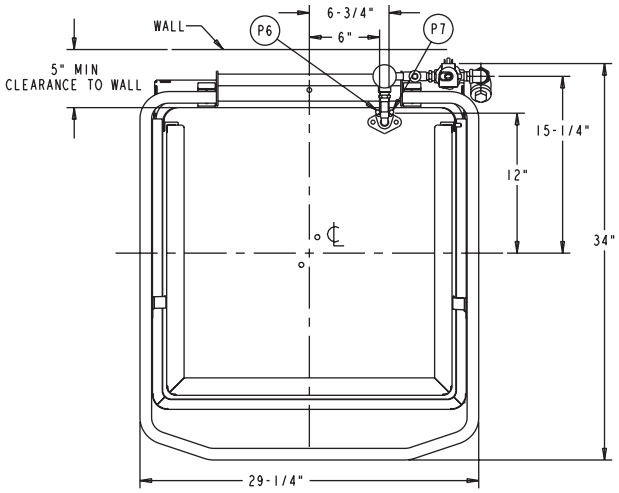

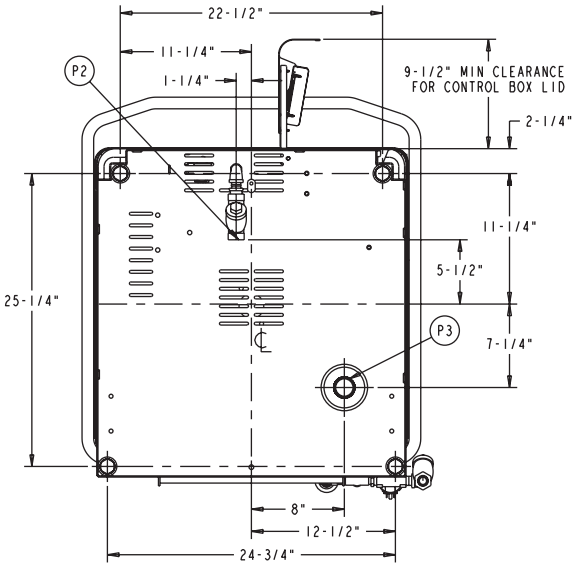

HOBART
701 S Ridge Avenue, Troy, OH 45374
1-888-4HOBART • www.hobartcorp.com

AM SELECT DISHWASHER – ELECTRIC

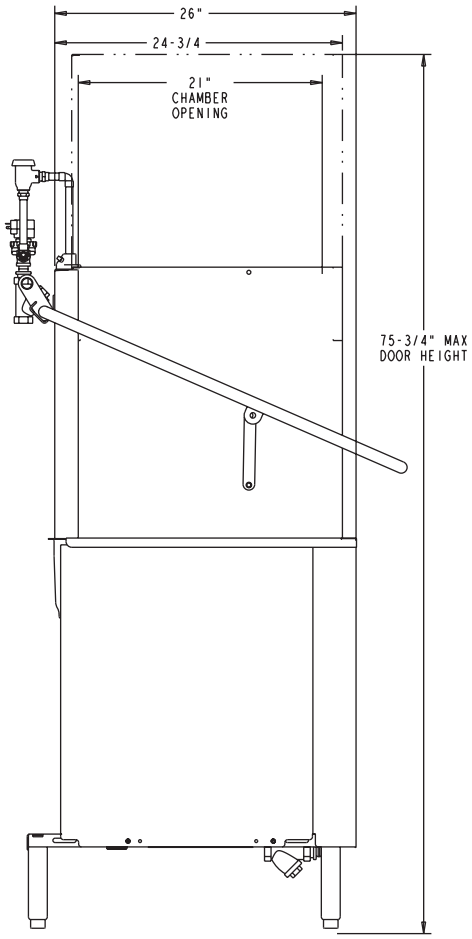

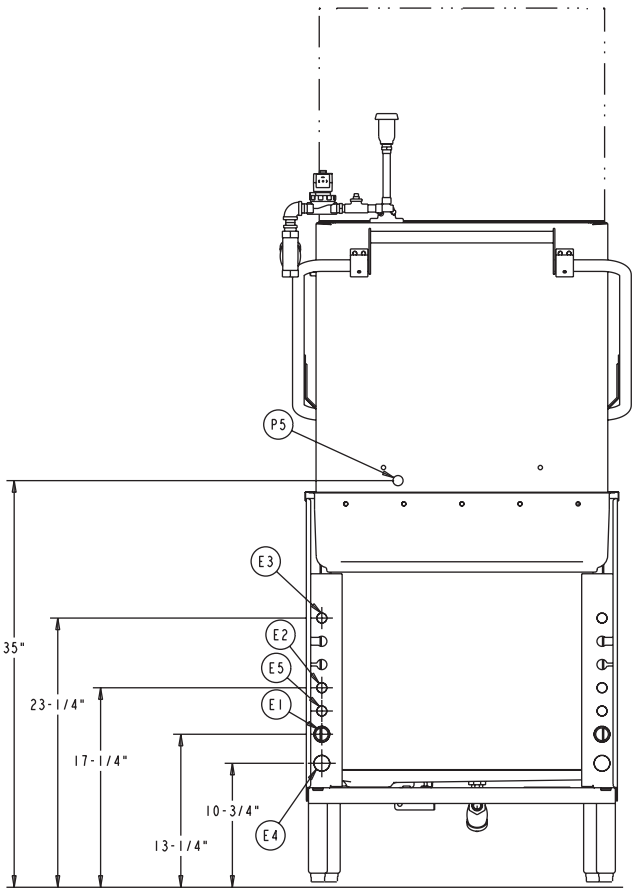

WARNING

ELECTRICAL AND GROUNDING CONNECTIONS MUST COMPLY WITH THE APPLICABLE PORTIONS OF THE NATIONAL ELECTRICAL CODE AND/OR OTHER LOCAL ELECTRICAL CODES.

PLUMBING CONNECTIONS MUST COMPLY WITH APPLICABLE SANITARY, SAFETY, AND PLUMBING CODES.

AM-15 WITH ELECTRIC HEAT			
ELEC. SPECS.	RATED AMPS	MINIMUM SUPPLY CIRCUIT CONDUCTOR AMPACITY	MAXIMUM OVERCURRENT PROTECTIVE DEVICE
208-240/60/1	43.0	50	50
208-240/60/3	24.9	30	30
480/60/3	13.4	15	15
*200-240/50/3	25.2	35	35
*380-415/50/3	12.5	15	15

BOOSTER AMPACITY RATINGS 8.5KW (NOT AVAILABLE WITH GAS HEAT)			
ELEC. SPECS.	RATED AMPS.	MINIMUM SUPPLY CIRCUIT CONDUCTOR AMPACITY	MAXIMUM OVERCURRENT PROTECTIVE DEVICE
208-240/60/1	35.4	50	50
208-240/60/3	20.4	30	30
480/60/3	10.2	15	15
*200-240/50/3	20.4	30	30
*380-415/50/3	11.8	15	15

MACHINE ELECTRICAL SPECIFICATIONS

208-240/60/1

208-240/60/3

480/60/3

* 200-240/50/3
* 380-415/50/3
* THESE ELECTRICAL SPECIFICATIONS ARE NOT SUBMITTTED FOR UL OR CUL LISTING

BOOSTER ELECTRICAL SPECIFICATIONS

208-240/60/1
208-240/60/3
480/60/3

* 200-240/50/3
* 380-415/50/3
* THESE ELECTRICAL SPECIFICATIONS ARE NOT SUBMITTED FOR UL OR CUL LISTING

CONNECTION INFORMATION
(*AFF - ABOVE FINISHED FLOOR)

LEGEND *(see page 6 for further details)*

E1 ELECTRICAL CONNECTION: MOTORS & CONTROLS (INCLUDING ELETRIC HEAT). 1" OR 3/4" CONDUIT HOLE.

E2 ELECTRICAL CONNECTION: VENT FAN CONTROL, 1/2" CONDUIT HOLE. (VFC1 & VFC2) 1.5 AMPS @ NAMEPLATE SUPPLY VOLTAGE, "ON"

E3 ELECTRICAL CONNECTION: RINSE AGENT & SANITIZER FEEDERS, 1/2" CONDUIT HOLE. (DPS1 & DPS2) 1.5 AMPS @ NAMEPLATE SUPPLY VOLTAGE, (RPS1 & RPS2) 1.5 AMPS @ NAMEPLATE SUPPLY VOLTAGE

E4 ELECTRICAL CONNECTION: ELECTRIC BOOSTER, (NOT AVAILABLE WITH GAS HEAT MACHINE) 1" CONDUIT HOLE.

E5 ELECTRICAL CONNECTION: EXTERNAL BOOSTER CONTROL 1/2" CONDUIT HOLE.(BSTR1 & BSTR2) 0.1 AMPS @ 120 VAC

P1 COMMON WATER CONNECTION: (W/O ELECTRIC BOOSTER) (180°F COMMON WATER CONNECTION: (W/O ELECTRIC BOOSTER) (120°F WATER MIN. CHEMICAL SANITIZING) 3/4" FPT.

P2 COMMON WATER CONNECTION: (W/ELECTRIC BOOSTER) (110°F WATER MIN. HOT WATER SANITIZING); 3/4" FPT.

P3 DRAIN: 1-1/2" MPT.

P4 DETERGENT PROBE SENSOR: REMOVE CAP AND STUD ASSEMBLY TO ACCESS 7/8" HOLE.

P5 DETERGENT FEEDER: REMOVE CAP PLUG TO ACCESS 7/8" HOLE.

P6 RINSE AGENT FEEDER: 1/8" NPT, REMOVE 1/8" NPT PIPE PLUG TO ACCESS TAPPED HOLE.

P7 SANITIZER FEEDER: (LOW TEMP MODE) 1/8" NPT, REMOVE 1/8" NPT PIPE PLUG TO ACCESS TAPPED HOLE.

AM SELECT DISHWASHER – GAS

HOBART
701 S Ridge Avenue, Troy, OH 45374
1-888-4HOBART • www.hobartcorp.com

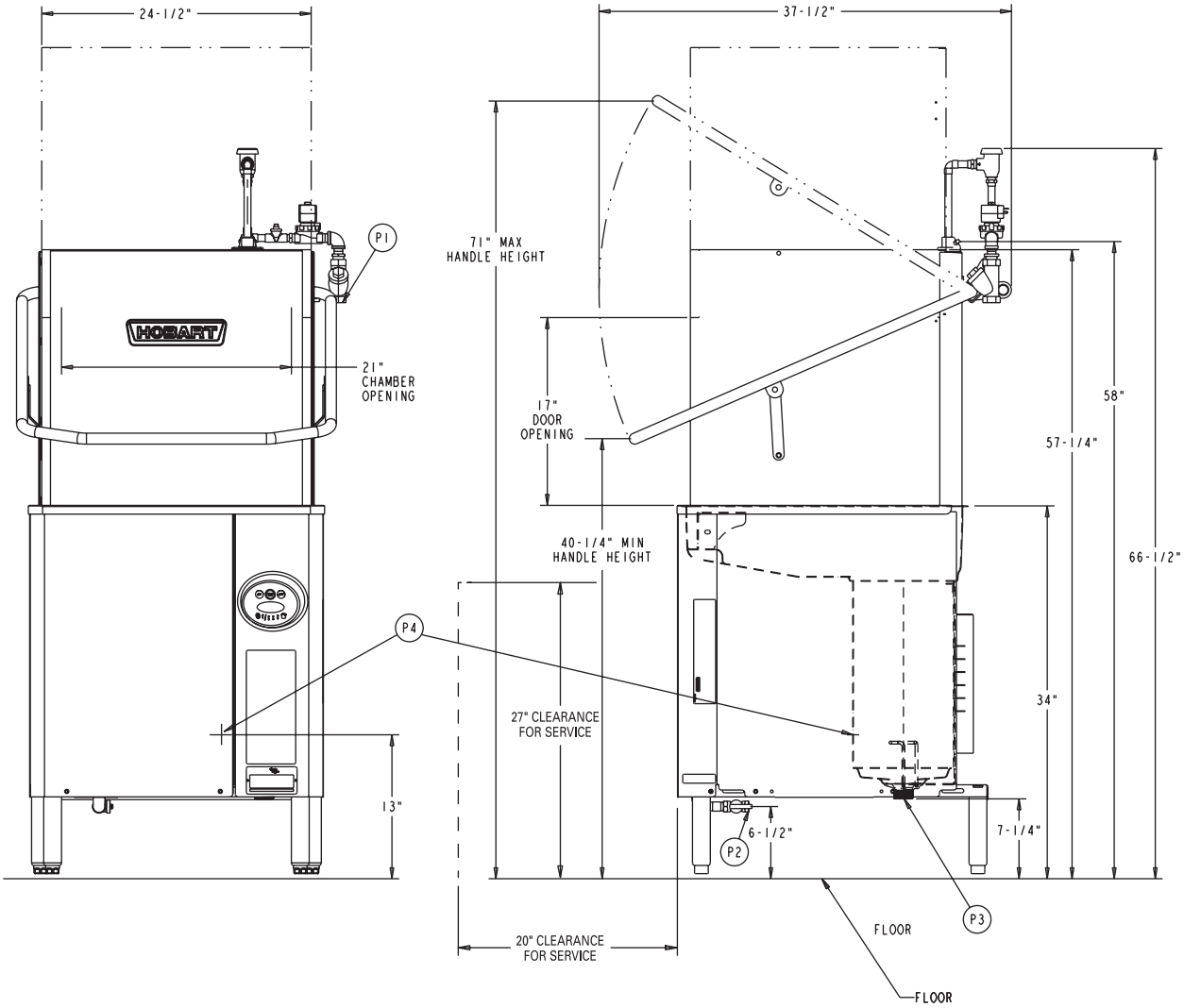

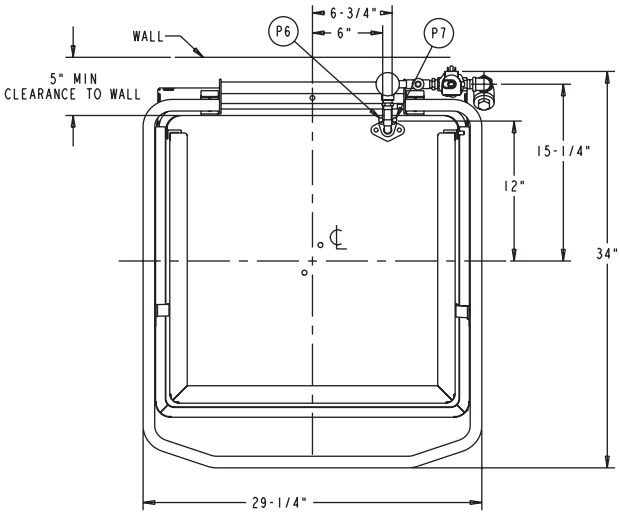

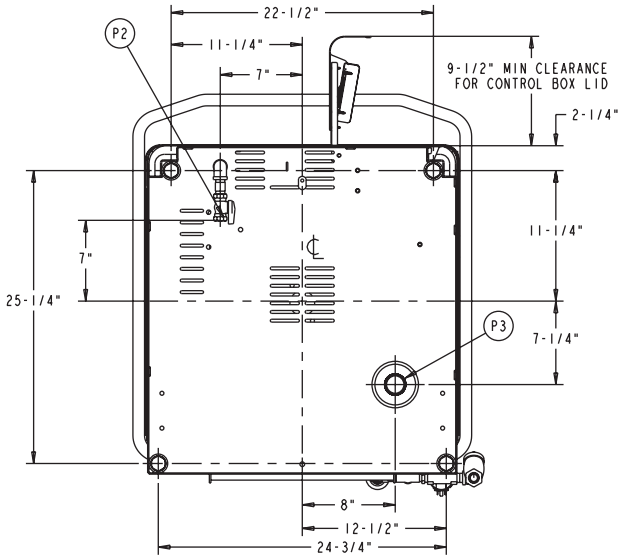

HOBART
701 S Ridge Avenue, Troy, OH 45374
1-888-4HOBART • www.hobartcorp.com

AM SELECT DISHWASHER – GAS

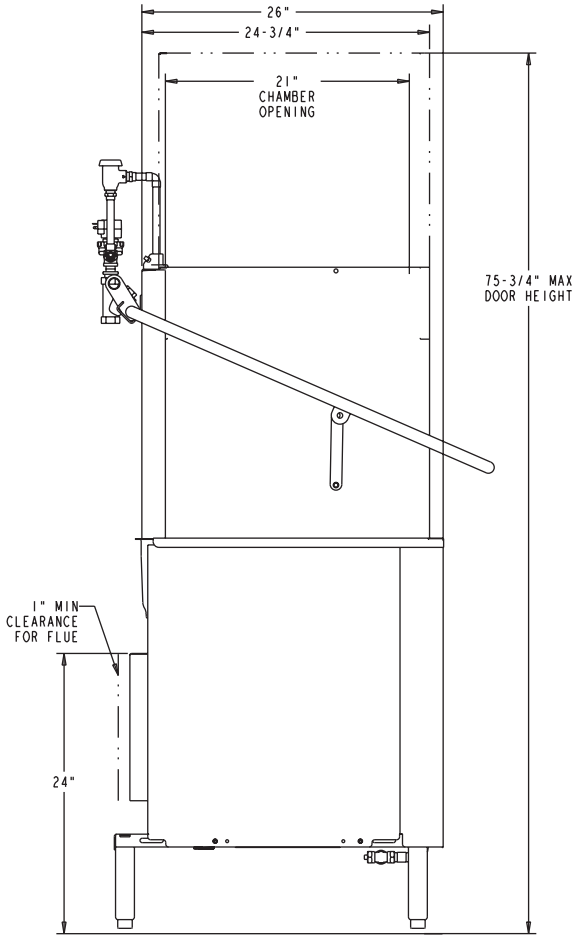

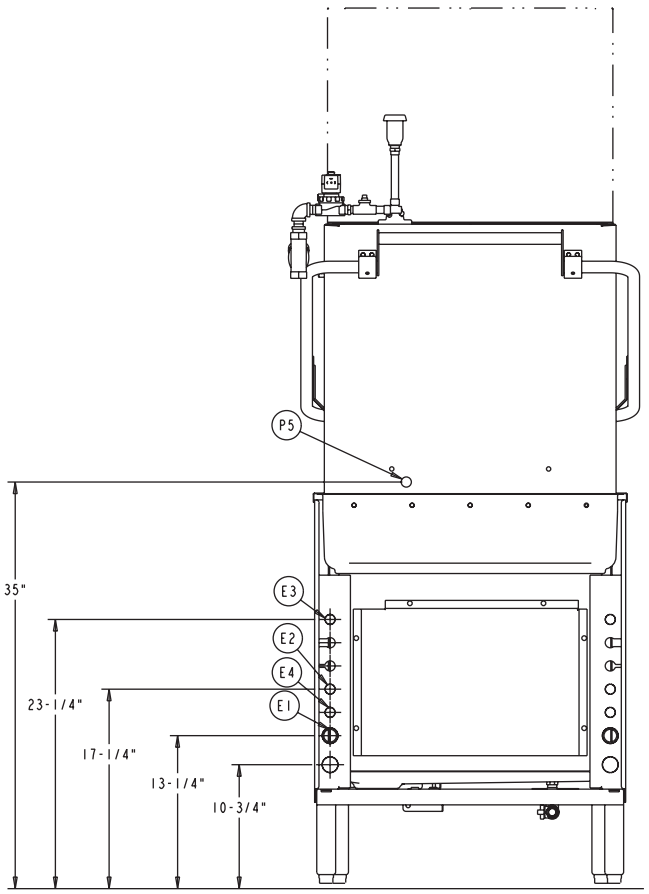

CONNECTION INFORMATION
(*AFF - ABOVE FINISHED FLOOR)

LEGEND *(see page 6 for further details)*

E1 ELECTRICAL CONNECTION: MOTORS & CONTROLS.
1" OR 3/4" CONDUIT HOLE.

E2 ELECTRICAL CONNECTION: VENT FAN CONTROL,
1/2" CONDUIT HOLE. (VFC1 & VFC2) 1.5 AMPS @ NAMEPLATE SUPPLY VOLTAGE,
"ON" WHEN MACHINE IS ON.

E3 ELECTRICAL CONNECTION: RINSE AGENT & SANITIZER FEEDERS,
1/2" CONDUIT HOLE. (DPS1 & DPS2) 1.5 AMPS @ NAMEPLATE SUPPLY VOLTAGE,
(RPS1 & RPS2) 1.5 AMPS @ NAMEPLATE SUPPLY VOLTAGE.

E4 ELECTRICAL CONNECTION: EXTERNAL BOOSTER CONTROL,
1/2" CONDUIT HOLE. (BSTR1 & BSTR2) 0.1 AMPS @ 120 VAC

P1 COMMON WATER CONNECTION:
(180°F WATER MIN. HOT WATER SANITIZING)
(120°F WATER MIN. CHEMICAL SANITIZING)
3/4" FPT.

P2 GAS CONNECTION - NAT. OR L.P. (WHEN ORDERED):
1/2" FPT.

P3 DRAIN: 1-1/2" MPT.

P4 DETERGENT PROBE SENSOR: REMOVE CAP AND STUD ASSEMBLY
TO ACCESS 7/8" HOLE.

P5 DETERGENT FEEDER: REMOVE CAP PLUG TO ACCESS
7/8" HOLE.

P6 RINSE AGENT FEEDER: 1/8" NPT, REMOVE 1/8" NPT
PIPE PLUG TO ACCESS TAPPED HOLE.

P7 SANITIZER FEEDER: 1/8" NPT, REMOVE 1/8" NPT
PIPE PLUG TO ACCESS TAPPED HOLE.

WARNING

ELECTRICAL AND GROUNDING CONNECTIONS
MUST COMPLY WITH THE APPLICABLE
PORTIONS OF THE NATIONAL ELECTRICAL
CODE AND/OR OTHER LOCAL ELECTRICAL CODES.

PLUMBING CONNECTIONS MUST COMPLY
WITH APPLICABLE SANITARY,SAFETY,
AND PLUMBING CODES.

AM-15 WITH GAS HEAT			
ELEC. SPECS.	RATED AMPS	MINIMUM SUPPLY CIRCUIT CONDUCTOR AMPACITY	MAXIMUM OVERCURRENT PROTECTIVE DEVICE
208-240/60/1	15.5	20	20
208-240/60/3	10.0	15	15
480/60/3	6.3	15	15

MACHINE
ELECTRICAL
SPECIFICATIONS

208-240/60/1

208-240/60/3

480/60/3

AM SELECT DISHWASHER

HOBART
701 S Ridge Avenue, Troy, OH 45374
1-888-4HOBART • www.hobartcorp.com

ELECTRIC TANK HEAT

PLUMBING NOTES:

WATER HAMMER ARRESTOR (MEETING ASSE-1010 STANDARD OR EQUIVALENT) TO BE SUPPLIED (BY OTHERS) IN COMMON WATER SUPPLY LINE AT SERVICE CONNECTION.

RECOMMENDED WATER HARDNESS TO BE 4-6 GRAINS FOR BEST RESULTS.

RECOMMENDED BUILDING FLOWING WATER PRESSURE TO THE DISHWASHER IS 15-25 PSI. IF PRESSURES HIGHER THAN 25 PSI ARE PRESENT, A PRESSURE REGULATING VALVE WITH INTERNAL THERMAL EXPANSION BY PASS, MUST BE SUPPLIED (BY OTHERS) IN THE WATER LINE TO THE DISHWASHER.

FOR CONVENIENCE WHEN CLEANING, WATER TAP SHOULD BE INSTALLED NEAR MACHINE WITH HEAVY DUTY HOSE AND SQUEEZE VALVE.

MISCELLANEOUS NOTES:

ALL DIMENSIONS TAKEN FROM FLOOR LINE MAY INCREASE 3/4" OR DECREASE 1/2" DEPENDING ON LEG ADJUSTMENT.

NET WEIGHT OF MACHINE: 274 LBS. W/O BOOSTER
DOMESTIC SHIPPING WEIGHT: 354 LBS. W/O BOOSTER

NET WEIGHT OF MACHINE: 304 LBS. W/BOOSTER
DOMESTIC SHIPPING WEIGHT: 384 LBS. W/BOOSTER

SIZE OF RACKS - 19-3/4" X 19-3/4"

DRAIN LEVER LOCATED INSIDE TANK.

VENT HOOD (IF REQUIRED) TO PROVIDE A MINIMUM 450 CFM EXHAUST (REF INSTALLATION INSTRUCTIONS).
SINGLE POINT ELECTRICAL CONNECTION AVAILABLE ON 3 PH MACHINES ONLY WITH INTEGRATED BOOSTER HEATER.

OPTIONAL AM SELECT SINGLE POINT ELECTRICAL SERVICE CONNECTION AS SHOWN BELOW			
ELEC. SPECS	RATED AMPS	MINIMUM SUPPLY CONDUCTOR AMPACITY	MAXIMUM PROTECTIVE DEVICE
208-240/60/3	45.4	60	60
480/60/3	23.7	30	30
*200-240/50/3	45.4	60	60
*380-415/50/3	25.2	30	30

GAS TANK HEAT

GAS HEATED DISHWASHERS

FOR NATURAL GAS, PRESSURE TO THE BURNER (CUSTOMER CONNECTION) SHOULD NOT EXCEED 7" W.C.

FOR LIQUIFIED PETROLEUM GAS, PRESSURE TO THE BURNER (CUSTOMER CONNECTION) SHOULD NOT EXCEED 11" W.C.

IF GAS PRESSURE IS HIGHER THAN 7"(NATURAL GAS) OR 11"(L.P.) W.C., A PRESSURE REGULATING VALVE MUST BE INSTALLED(BY OTHERS) IN THE GAS LINE TO THE DISHWASHER.

GAS HEAT BTU INPUT - 25,000 NATURAL
25,000 PROPANE

PLUMBING NOTES:

WATER HAMMER ARRESTOR (MEETING ASSE-1010 STANDARD OR EQUIVALENT) TO BE SUPPLIED (BY OTHERS) IN COMMON WATER SUPPLY LINE AT SERVICE CONNECTION.

RECOMMENDED WATER HARDNESS TO BE 4-6 GRAINS FOR BEST RESULTS.

RECOMMENDED BUILDING FLOWING WATER PRESSURE TO THE DISHWASHER IS 15-25 PSI. IF PRESSURES HIGHER THAN 25 PSI ARE PRESENT, A PRESSURE REGULATING VALVE WITH INTERNAL THERMAL EXPANSION BY PASS, MUST BE SUPPLIED (BY OTHERS) IN THE WATER LINE TO THE DISHWASHER.

FOR CONVENIENCE WHEN CLEANING, WATER TAP SHOULD BE INSTALLED NEAR MACHINE WITH HEAVY DUTY HOSE AND SQUEEZE VALVE.

MISCELLANEOUS NOTES:

ALL DIMENSIONS TAKEN FROM FLOOR LINE MAY INCREASE 3/4" OR DECREASE 1/2" DEPENDING ON LEG ADJUSTMENT.

NET WEIGHT OF MACHINE: 306 LBS.
DOMESTIC SHIPPING WEIGHT: 386 LBS.

SIZE OF RACKS - 19-3/4" X 19-3/4"

DRAIN LEVER LOCATED INSIDE TANK.

VENT HOOD (IF REQUIRED) TO PROVIDE A MINIMUM 450 CFM EXHAUST (REF INSTALLATION INSTRUCTIONS).

	AM Select	
	Hot Water Sanitizing	**Chemical Sanitizing**
Machine Ratings (Mechanical) Racks per Hour (Max.)	58	65
Dishes per Hour (Average 25 per rack)	1,450	1,625
Glasses per Hour (Average 45 per rack)	2,610	2,925
Table to Table - Inside Tank at Table Connection (Inches)	25¼"	25¼"
Overall Dimensions - (H x W x D) (Inches)	66.5" x 27" x 28.5"	
Wash Motor H.P.	2	2
Wash Tank Capacity - Gallons	14	14
Wash Pump Capacity - Gallons per Minute - Weir Test	160	160
Heating Equipment - (For keeping power wash water hot) Gas Burner (Regulated) Natural/LP Gas BTU/Hr.	25,000	25,000
Electric Heating Unit (Regulated)	5 kw	5 kw
Rinse - Minutes operated during hour of capacity operation	9.66	10.83
Seconds of rinse per rack	10	10
Rate of Rinse Flow - Gallons per Minute - at 20 lbs. Flow Pressure	4.4	4.4
Rinse Consumption - Gallons per Hour - **Maximum -** at 20 lbs. Flow Pressure	42.9	48.1
Rinse Cycle - Gallons per Rack - at 20 PSI Flow	.74 - 180°F Min.	.74 - 140°F Min.
Steam Booster, if used based on 20 PSI steam - 20 PSI water flowing 130°F entering water raised to 180°F min. (50°F rise) - Lbs. per Hour	40	40
Peak Rate of Drain Flow - Gallons per Minute (Initial rate with full tank)	14	14
Exhaust Requirements	450	450
Shipping Weight Crated - Approx. lbs. - Unit only, with booster	354 w/o Booster 384 w/Booster	354

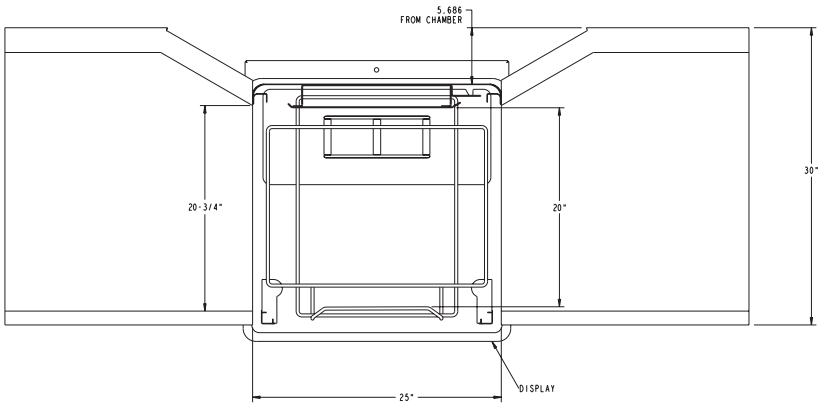

PASS THRU INSTALLATION

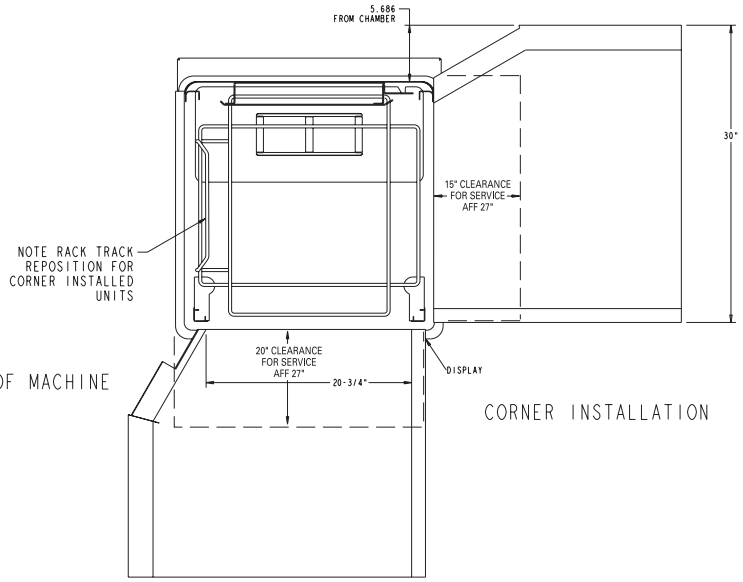

TOP INSIDE VIEW OF MACHINE

CORNER INSTALLATION

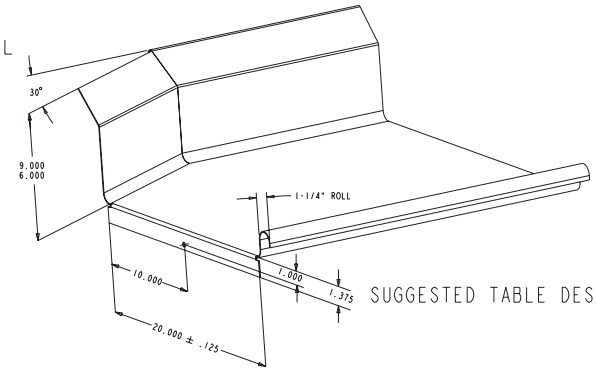

SUGGESTED TABLE DESIGN

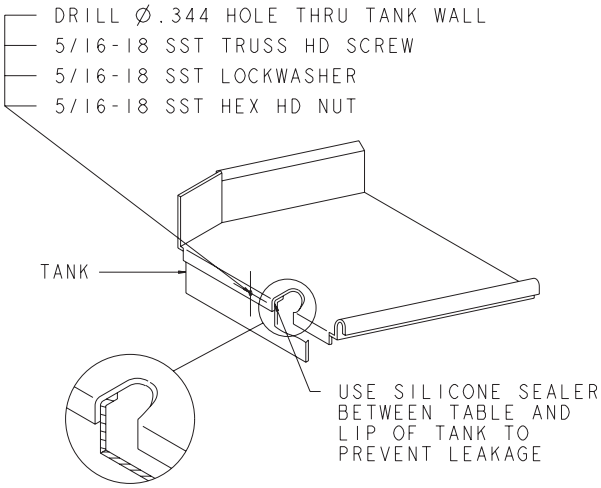

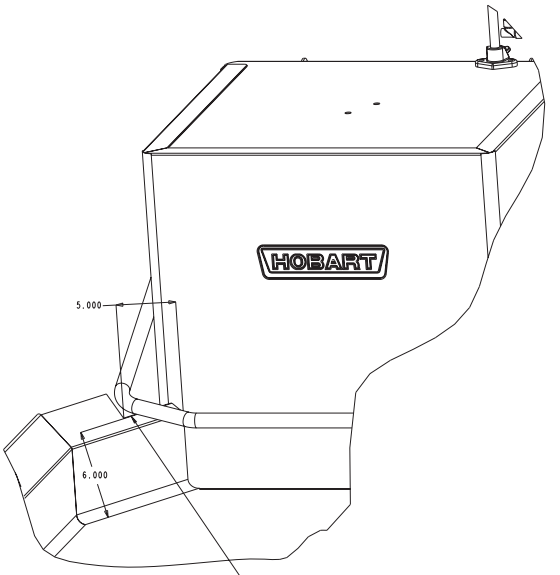

A NOTCH MUST BE ADDED TO BACKSPLASHES OVER 6" HIGH ON CORNER MACHINES TO PREVENT INTERFERENCE WITH DOOR MECHANISM. NOTCH MUST EXTEND 5" FROM FACE OF THE MACHINE.

AM SELECT DISHWASHER

HOBART
701 S Ridge Avenue, Troy, OH 45374
1-888-4HOBART • www.hobartcorp.com

The microcomputer-based control system is built into the AM Select dishwasher. It is available in standard electrical specifications of 208-240/60/1, 208-240/60/3, 480/60/3, 200-240/50/3, 380-415/50/3 and is equipped with a reduced voltage pilot circuit transformer.

***CAUTION: CERTAIN MATERIALS, INCLUDING SILVER, ALUMINUM AND PEWTER ARE ATTACKED BY SODIUM HYPOCHLORITE (LIQUID BLEACH) IN THE CHEMICAL SANITIZING DISHWASHER MODE OF OPERATION. WATER HARDNESS MUST BE CONTROLLED TO 4-6 GRAINS FOR BEST RESULTS.**

CONSTRUCTION: Drawn tank, tank shelf and feet constructed of 16 gauge stainless steel. Wash chamber and front trim panel above motor compartment are polished, satin finish. Frame is 12 gauge stainless steel, chamber is 18 gauge, and removable trim panels are 20 gauge.

CHAMBER LIFT: Chamber coupled by stainless steel handle, spring counterbalanced. Chamber guided for ease of operation and long life.

PUMP: With stainless steel pump and impeller, integral with motor assures alignment and quiet operation. Pump shaft seal with stainless steel parts and a carbon ceramic sealing interface. Easily removable impeller housing permits ease of inspection. Capacity 160 GPM. Pump is completely self-draining.

MOTOR: Built for Hobart, 2 H.P., with inherent thermal protection, grease-packed ball bearings, splash-proof design, ventilated. Single-phase is capacitor-start, induction-run type. Three-phase is squirrel-cage, induction type.

MICROCOMPUTER CONTROL SYSTEM: Hobart microcomputer controls, assembled within water-resistant enclosure, provide built-in performance and reliability.

The microcomputer control, relays and contactors are housed behind a stainless steel enclosure, hinged to provide easy access for servicing. The line voltage electrical components are completely wired with 105°C, 600V thermoplastic insulated wire with stranded conductors and routed through listed electrical conduit. Electrical components are wired with type ST cord. Line disconnect switch NOT furnished.

CYCLE OPERATION: The microcomputer-timing program is started by closing the doors, which actuates the door cycle switch. The microcomputer energizes the wash pump motor contactor during the wash portion of the program. After the wash, a dwell permits the upper wash manifold to drain. At the end of the dwell, the final rinse solenoid valve is energized. After the final rinse valve closes, Sani-Dwell (Hot Water Mode only) permits sanitization to continue. The Rinse display remains on during this period, completing the program. If the microcomputer is interrupted during a cycle by the door-cycle switch, the microcomputer is reset to the beginning of the program. **Hot Water Sanitizing (58 racks per hour) – 57 seconds:** 38 Second Wash, 2 Second Dwell, 10 Second Rinse, 7 Second Sani-Dwell. **Chemical Sanitizing (65 racks per hour) – 50 Seconds:** 38 Second Wash, 2 Second Dwell, 10 Second Rinse. Other programs can be pre-selected by your Hobart service technician.

Manual wash cycle selector also provides selection of 2-, 4- or 6-minute wash cycles for heavier washing applications.

WASH: Hobart revolving stainless steel wash arms with unrestricted openings above and below provide thorough distribution of water jets to all dishware surfaces. Arms are easily removable for cleaning and are interchangeable. Stainless steel tubing manifold connects upper and lower spray system.

RINSE: Rotating rinse arms, both upper and lower, feature 14 rinse nozzles. The stainless steel upper and lower rinse arms are easily removable without tools for inspection and are interchangeable. Diaphragm-type rinse control solenoid valve mounted outside machine. Machine is equipped with special hot water vacuum breaker on downstream side of rinse valve – mounted 6" above uppermost rinse opening. Easy open brass line strainer furnished.

FILL: Microcomputer controlled fill valve installed on upstream side of rinse vacuum breaker. Ratio fill method is used giving the correct fill at any flowing water pressure. (20 PSIG minimum necessary for proper rinsing.)

DRAIN AND OVERFLOW: Large bell type automatic overflow and drain valve controlled from inside of machine. Drain automatically closed by lowering chamber. Drain seal is large diameter, high temperature “O” ring. Cover for overflow is integral part of the standpipe.

STRAINER SYSTEM: Equipped with large, exclusive self-flushing, easily removable perforated stainless steel, one-piece strainer and large capacity scrap basket. Submerged scrap basket minimizes frequent removal and cleaning.

HEATING EQUIPMENT: Standard tank heat is 5KW electric _immersion heating element. Regulated power infrared gas immersion tube system is optional at extra cost. A solid-state igniter board controls the gas valve and provides flame ignition. A transformer steps the control circuit voltage down to 24 volts to power the igniter board and gas valves.

Gas Heated Dishwasher: For natural gas, gas pressure (customer connection) not to exceed 7" W.C. For liquefied petroleum, gas pressure to burner (customer connection) not to exceed 11" W.C. If gas pressure is higher than 7" W.C. natural or 11" W.C. LP, a pressure regulating valve must be supplied (by others) in the gas line to the dishwasher. Water temperature regulation is controlled by thermistor sensor in combination with microcomputer controls. The tank heat and positive low water protection microcomputer circuits are automatically activated when the main power switch is turned “on”. If tank is accidentally drained, low water protection device automatically turns heat off. Gas immersion tube is additionally protected by a high limit device mounted on the surface of the tube. These features are standard with the Hobart Microcomputer Control System.

OPTIONAL EQUIPMENT AT EXTRA COST – ELECTRIC BOOSTER HEATER: Electric booster with Sense-A-Temp™ technology adequately sized to raise 110°F inlet water to 180°F (not available on gas heat machines).

ACCESSORIES: 19¾" x 19¾" peg and combination dish racks. Splash shield for corner installations. End of cycle audible alarm (field activated). Delime notification (field activated). Desirable functional accessories can be furnished at added cost. See listed options and accessories on this specification sheet. Write to the factory for special requirements not listed above.

As continued product improvement is a policy of Hobart, specifications are subject to change without notice.