Item # _____

Quantity _____

C.S.I. Section 11400

HOBART
701 S Ridge Avenue, Troy, OH 45374
1-888-4HOBART • www.hobartcorp.com

2612 SLICER

STANDARD FEATURES

- Exclusive Tilting, Removable Carriage System
- CleanCut™ Knife
- Top Mounted Borazon Stone Sharpener
- Hobart Poly V-Belt Drive System
- Sanitary Burnished Aluminum Base
- Double-Action Indexing Cam
- Permanently Mounted Ring Guard
- Heavy Gauge Stainless Steel Knife Cover
- Cleaning Leg
- Removable Rear Deflector
- ½ H.P. Knife Drive Motor
- Nylon Carriage Roller
- Electroless Nickel Plated Single Slide Rod with Reservoir Wick
- Stainless Steel Carriage
- Ergonomic Style Handle

ACCESSORIES

- ❑ Low Fence
- ❑ High Fence
- ❑ Food Chute
- ❑ Heavy Meat Grip with Clips
- ❑ 4" Legs
- ❑ Product Tray

MODEL

- ❑ 2612 – Basic Manual Slicer with the Works
- ❑ 2612C – Basic Manual Slicer with Maximum Security Correctional Package (120/60/1 only)

Specifications, Details and Dimensions on Inside and Back.

HOBART

2612 SLICER

HOBART
701 S Ridge Avenue, Troy, OH 45374
1-888-4HOBART • www.hobartcorp.com

SOLUTIONS / BENEFITS

Exclusive Tilting, Removable Carriage System
Reduces labor, improves sanitation
- Tilt design allows for ease of midday cleaning
- Removable for complete cleaning and sanitation procedures

CleanCut™ Knife
Reduced cost of ownership, improved yield
- Thin edge design improves yield
- Super alloy edge lasts longer

Top Mounted Borazon Stone Sharpener
Ease of use, improved sanitation, reduced costs
- Single action sharpens and hones in just five seconds
- Removable and submersible for easy cleaning and sanitation
- Lifetime guaranteed Borazon sharpening stones provide maximum performance with reduced maintenance costs

Poly V-Belt Drive System
Performance, durability, reduced maintenance
- Quieter operating slicer
- Patented design extends belt life while producing optimum slicing results

Sanitary Burnished Aluminum Base
Improved sanitation, labor savings
- One piece base protects against possible growth of bacteria
- No cracks/crevices or bolt holes where product can lodge and bacteria may grow
- Easy cleanup and durable finish

Double-Action Indexing Cam
Increases reliability, easier to use, increased yield
- The first full revolution of the indexing knob provides precise control for shaving, chipping and thin slicing
- The second revolution opens the gauge plate quickly for thicker slicing
- Gauge plate holds position for consistent, precision slicing

Permanently Mounted Ring Guard
Protection
- Protects knife during operation and cleaning

Heavy Gauge Stainless Steel Knife Cover
Durability, ease of use, sanitation
- Twelve-gauge stainless steel maintains shape to ensure consistent fit
- Spring loaded knob for quick removal and easy cleanup
- One piece design for simplistic usage

Cleaning Leg
Improved sanitation, ease of use
- Props machine for easy cleaning underneath slicer

Removable Rear Deflector
Improved sanitation, ease of use
- Allows access for thorough cleaning
- No tools required means easy removal during cleaning

½ H.P. Knife Drive Motor
Durability, performance
- Reserve power runs at 400 rpm for optimum results

Nylon Carriage Roller
Performance
- Easy movement for manual operation

Electroless Nickel Plated Single Slide Rod with Reservoir Wick
Performance, durability, lower maintenance
- Smooth operation with continuous lubrication of carriage rod
- Resistant to rust

Stainless Steel Carriage
Improved sanitation, durability
- Maximum sanitation with minimum cleanup time
- Corrosion resistant, impact resistant

Ergonomic Style Handle
Operator satisfaction
- Comfortable manual operation

Meat Grip Options
Multiple choices for improved yield and consistency
- Front meat grip standard
- Heavy front meat grip available

SPECIFICATIONS

TILTING REMOVABLE CARRIAGE SYSTEM: Positive angle carriage design enables operator to slice without manual feed. The stainless steel carriage system tilts back easily for midday cleaning and is removable for thorough cleaning and sanitation procedures. The carriage has 12½" manual travel.

CLEANCUT™ KNIFE: Another Hobart exclusive, the knife is constructed of 304L stainless steel and high performance super alloy. Knife is protected by a permanently mounted ring guard with integrated product deflector. The stainless steel knife cover provides easy access for cleaning. Gauge plate protects knife edge when closed. Knife cover is quickly removed with a quarter turn of the spring loaded locking knob.

TOP MOUNTED BORAZON STONE SHARPENER: One lever operation utilizing two Borazon stones to sharpen and hone in five seconds. Removable and top mounted. When sharpener is removed for cleaning, knife edge is shielded. Borazon stones have lifetime guarantee.

HOBART POLY V-BELT DRIVE SYSTEM: Knife is driven by a Hobart Poly V belt and runs at 400 rpm for optimal performance.

SANITARY BURNISHED ALUMINUM BASE: One-piece base protects against possible growth of bacteria. All surfaces are durable and smooth, presenting no holes or crevices in which food can lodge.

DOUBLE-ACTION INDEXING CAM: First revolution of index cam for precision slicing; second revolution for thicker slicing selection. Indexing cam holds true to setting during slicing operation.

PERMANENTLY MOUNTED RING GUARD: Permanently mounted ring guard with integrated product deflector protects knife.

HEAVY GAUGE STAINLESS STEEL KNIFE COVER:
One piece design made of 12 gauge stainless steel, durable to maintain shape and ensure consistent fit. Spring loaded knob for quick removal and replacement.

CLEANING LEG: Cleaning leg supports the slicer in tilted position for cleaning beneath the machine.

REMOVABLE REAR DEFLECTOR: No tools are required for removal of the deflector for thorough cleaning of the slicer.

KNIFE MOTOR: ½ H.P., permanently lubricated ball bearings. Single phase capacitor-start, induction run.

ELECTROLESS NICKEL PLATED SINGLE SLIDE ROD WITH RESERVOIR WICK: Transport slide rod is E-Nickel electroless plated. Slide rod bearings feature an oil reservoir/oil wick.

FINISH: Stainless steel carriage, gauge plate, and knife cover. Burnished aluminum base.

ERGONOMIC STYLE HANDLE: Specially designed for ease of use during manual operation.

MEAT GRIP: Front mounted grip is high strength thermoplastic. Swings out of way when not in use.

ELECTRICAL SPECIFICATIONS: 120/60/1 and 240/60/1 (2.5 amps) – U L Listed. Also available in 100/50/60/1 and 230/50/1 (2.5 amps) – not submitted for U L Listing.

SWITCH: Moisture protected toggle type, operated by a push-pull rod.

CORD & PLUG: 6-foot, three-wire power supply cord and plug. Plug not furnished on export models.

CAPACITY: The carriage will take food up to 12" in width or 7½" in diameter.

GAUGE PLATE: Gauge plate is a heavy aluminum casting with ribbed laminated stainless steel face for smooth feeding. Adjustable to cut any thickness of slice up to 1".

WARRANTY: All parts and service coverage for one year including knife. Lifetime guarantee on Borazon stones in the sharpening system.

WEIGHTS FOR THE FOLLOWING ITEMS: Tubular Chute 9.1 lbs.; Swing Arm .61 lbs.; Heavy Front Meat Grip 2.76 lbs.; Heavy Handle 2.7 lbs.; Standard Meat Grip 2.34 lbs.

WEIGHT: Shipping 135 lbs., Net 96 lbs.

HOBART
701 S Ridge Avenue, Troy, OH 45374
1-888-4HOBART • www.hobartcorp.com

DETAILS AND DIMENSIONS

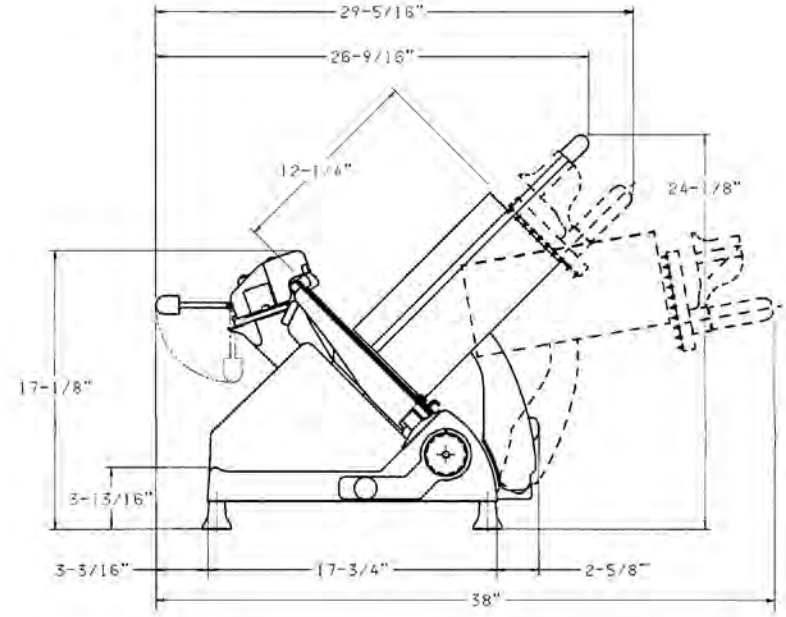

WARNING

ELECTRICAL AND GROUNDING CONNECTIONS MUST COMPLY WITH THE APPLICABLE PORTIONS OF THE NATIONAL ELECTRICAL CODE AND/OR OTHER LOCAL ELECTRICAL CODES.

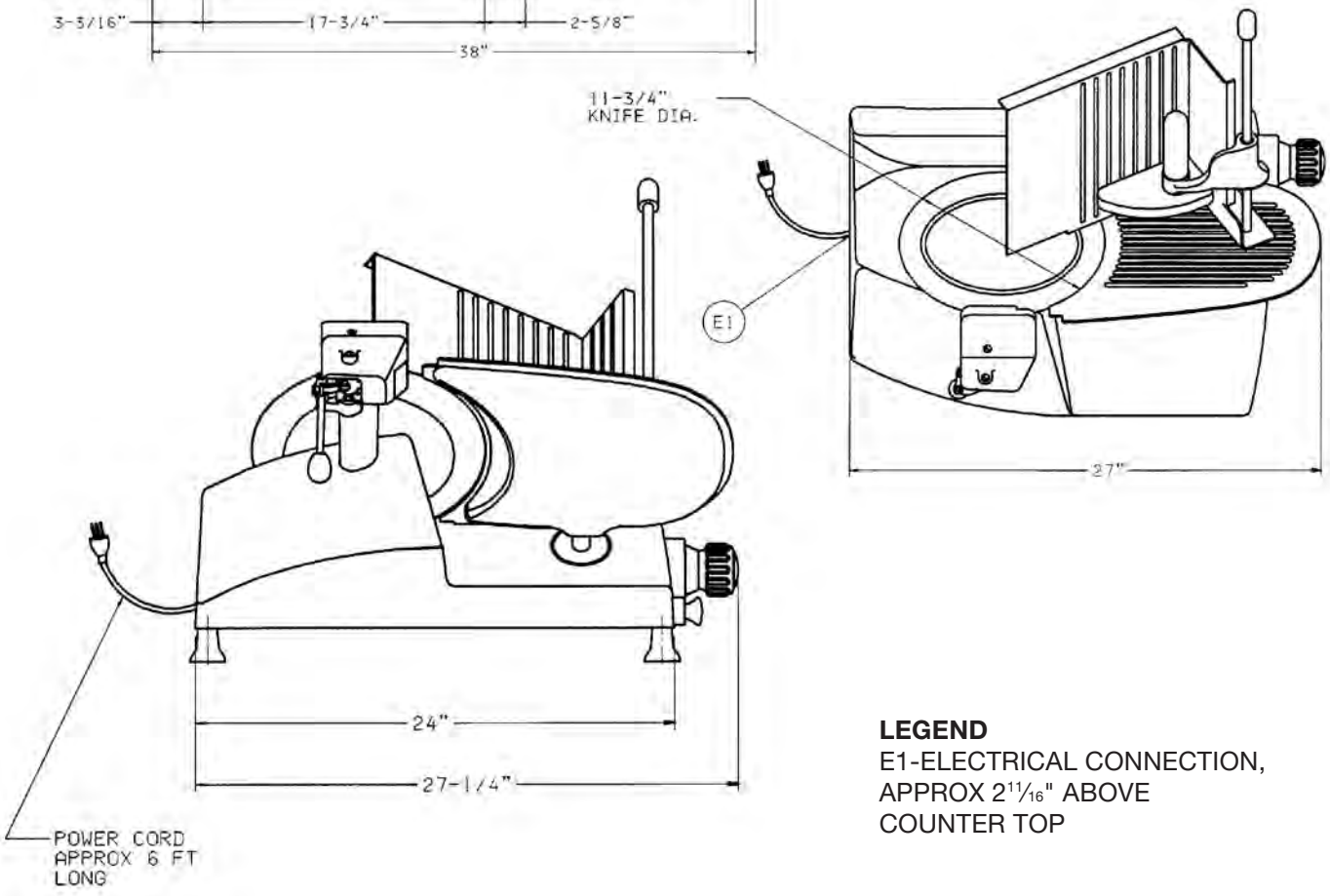

LEGEND
E1-ELECTRICAL CONNECTION, APPROX 2 11/16" ABOVE COUNTER TOP

As continued product improvement is a policy of Hobart, specifications are subject to change without notice.