GUSTO SOLID DOOR REFRIGERATORS

Models: R1DR24S & R2DR47S

Gusto Solid Door Refrigerators

Features & Benefits:

Digital Temperature Control System provides precise and constant temperature. This level of precision allows food products to remain fresh over an extended period of time.

High-Tech Monitor digitally displays present temperature, which makes adjusting the temperature much easier, and much more accurate.

The Hot Gas Condensate System surfaces have been specially treated to resist corrosion. This not only increases efficiency without the risk of refrigerant leakage from corrosion, but also prevents the overflow of condensate water.

Solid door refrigerators are designed with oversized and balanced (CFC Free R-134A) refrigeration systems. These include efficient evaporators and condensers for faster cooling and greater efficiency.

Automatic Evaporator Fan Motor Delays. By stopping the evaporator fan when the refrigerator door is opened, the circulation of hot, moist air into the refrigerator is prevented. This increases energy efficiency an lengthens the life of the compressor.

Adjustable, heavy duty, epoxy-coated, wire shelves.

The Gusto refrigerator model boasts a stainless steel exterior (galvanized steel top, bottom, and back) and stainless steel interior with AL inside walls and door liners. It guarantees the utmost in cleanliness and long product life. Unlike other companies' products, the sharp corners and edges have been rounded to reduce the risk of injury.

The entire cabinet structure and solid doors are foamed-in-place using high density, CFC free polyurethane insulation.

Customers' fatigue fades away with easy grip handles and doors that open effortlessly.

The magnetic door gaskets are of one piece construction, removable without tools for ease of cleaning and replacement.

Top mount compressor units are designed to ensure that each part is properly sized and balanced to achieve the highest efficiency and performance.

Refrigerator holds 33°F to 38°F for the best in cold food preservation.

Warranty:

Gusto Refrigerators are covered by Turbo Air's Warranty for two years parts and labor, and an additional 3 years on compressor.

GUSTO EQUIPMENT www.gustoequipment.com info@gustoequipment.com

WARRANTY/SERVICE: ph. 800.627.0032 fax 310.900.1077

GUSTO SOLID DOOR REFRIGERATORS

Models: R1DR24S & R2DR47S

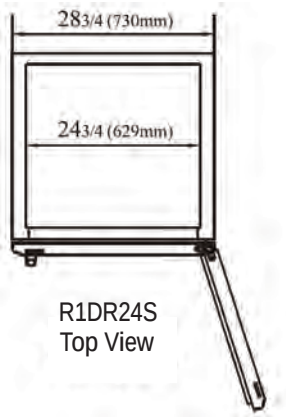

R1DR24S
Top View

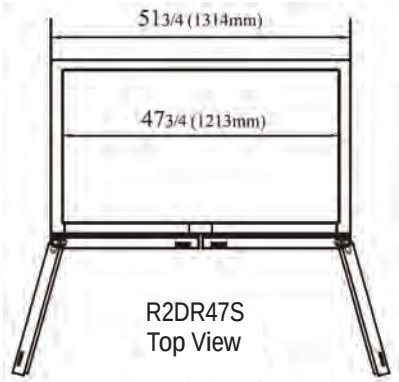

R2DR47S
Top View

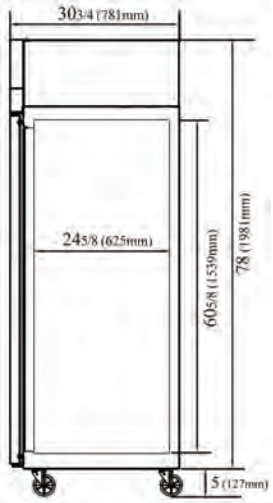

R1DR24S & R2DR47S
Side View

Specifications

Model No.	Swing Door	Cubic Feet	No. of Shelves	HP	AMPS	Crated Weight (lbs)	L x D* x H** (inches)
R1DR24S	1	24	3	1/4	5.5	270	28-3/4 x 30-3/4 x 78
R2DR47S	2	47	6	1/3	9.2	401	51-3/4 x 30-3/4 x 78

*Depth does not include 1-3/8" for rear condensate enclosure. **Height does not include 5" for caster height.

Additional Electrical & Dimensional Data

Model No.	R1DR24S	R2DR47S
Voltage	115/60/1	115/60/1
Plug Type	NEMA-5-15P	NEMA-5-15P
Feed Wires w/Ground	3	3
Cord Length (ft.)	9	9
Refrigerant	R-134A	R-134A

Model No.	R1DR24S	R2DR47S
No. of Racks Accepted	1	2
Internal Length	24-3/4	47-3/4
Internal Depth	24-5/8	24-5/8
Internal Height	60-5/8	60-5/8
Shelf Size (L x D) in.	23-1/2 x 23-3/4	23-1/2 x 23-1/8

4" Swivel Casters
Self-Contained System
Incandescent Interior Lighting

Door Locks
Solid and Sturdy Grille Design
Minimum Wattage Heater in Cabinet Frame

Gusto Solid Door Refrigerators

Due to periodic changes in designs, methods, procedures, policies and regulations, the specifications contained in this sheet are subject to change without notice. While Turbo Air exercises good faith efforts to provide information that is accurate, we are not responsible for errors or omissions in information provided or conclusions reached as a result of using the specifications. By using the information provided, the user assumes all risks in connection with such use.

GUSTO EQUIPMENT **www.gustoequipment.com** **info@gustoequipment.com**

WARRANTY/SERVICE: ph. 800.627.0032 fax 310.900.1077

072013

GUSTO® EQUIPMENT