GUSTO ALUMINUM DUNNAGE RACKS

Models DR2036, DR2048, DR2060

Gusto Dunnage Racks

Features & Benefits:

These heavy duty, all-welded, aluminum dunnage racks keep product organized and off the floor. They are approved for use in freezers, coolers, and displays, as well as packaging and storage areas. They can hold weight capacities of up to 2,000 pounds.

Quality Construction:

Our dunnage racks are constructed of high tensile, extruded aluminum tube, 1.5” x 1.75” x .07” wall thickness, uniform throughout. Primary aluminum, type 6063-T5 alloy.
All seams have been heli-arc welded. Feet are capped and welded as well.

Warranty:

Gusto Dunnage Racks are covered for one year against manufacturing defects, and lifetime against rust.

GUSTO ALUMINUM DUNNAGE RACKS

Models DR2036, DR2048, DR2060

Gusto Dunnage Racks

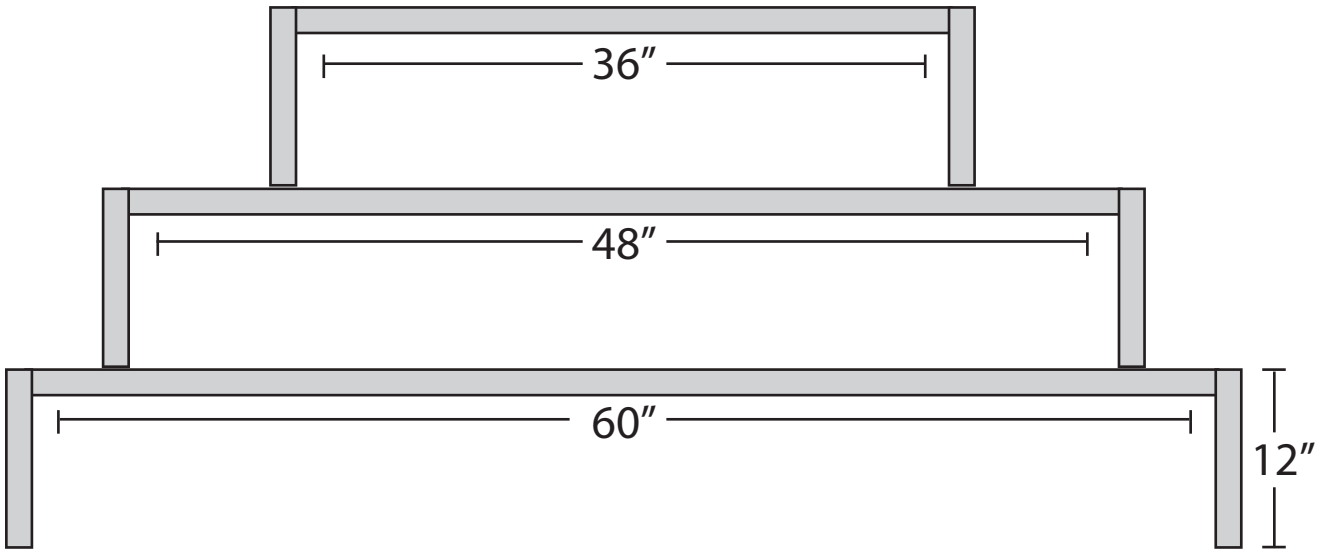

Specifications

Model No.	Size	Weight Capacity (lbs.)	Number of Support Bars	Crated Weight (lbs)	Overall Dimensions (inches)
DR2036	36” x 20”	2000	4	10	36 l. x 20 w. x 12 h.
DR2048	48” x 20”	2000	4	11	48 l. x 20 w. x 12 h.
DR2060	60” x 20”	2000	4	14	60 l. x 20 w. x 12 h.

Due to periodic changes in designs, methods, procedures, policies, and regulations, the specifications contained in this sheet are subject to change without notice. While we exercise good faith efforts to provide information that is accurate, we are not responsible for errors or omissions in information provided or conclusions reached as a result of using the specifications. By using the information provided, the user assumes all risks in connection with such use.

GUSTO EQUIPMENT **www.gustoequipment.com** **info@gustoequipment.com**

082013

GUSTO® EQUIPMENT